PREPLANT TILLAGE AND
PRECISION NUTRIENT PLACEMENT

Orthman
AGRICULTURAL

www.orthman.com

1 tRIPr
OPERATOR'S MANUAL

ORTHMAN
MANUFACTURING
INCORPORATED

STILL THE STRONGEST

ORTHMAN MFG. INC.
75765 RD. 435
LEXINGTON, NE 68850

OM05-03-01

1tRIPr

PREPLANT TILLAGE AND PRECISION NUTRIENT PLACEMENT

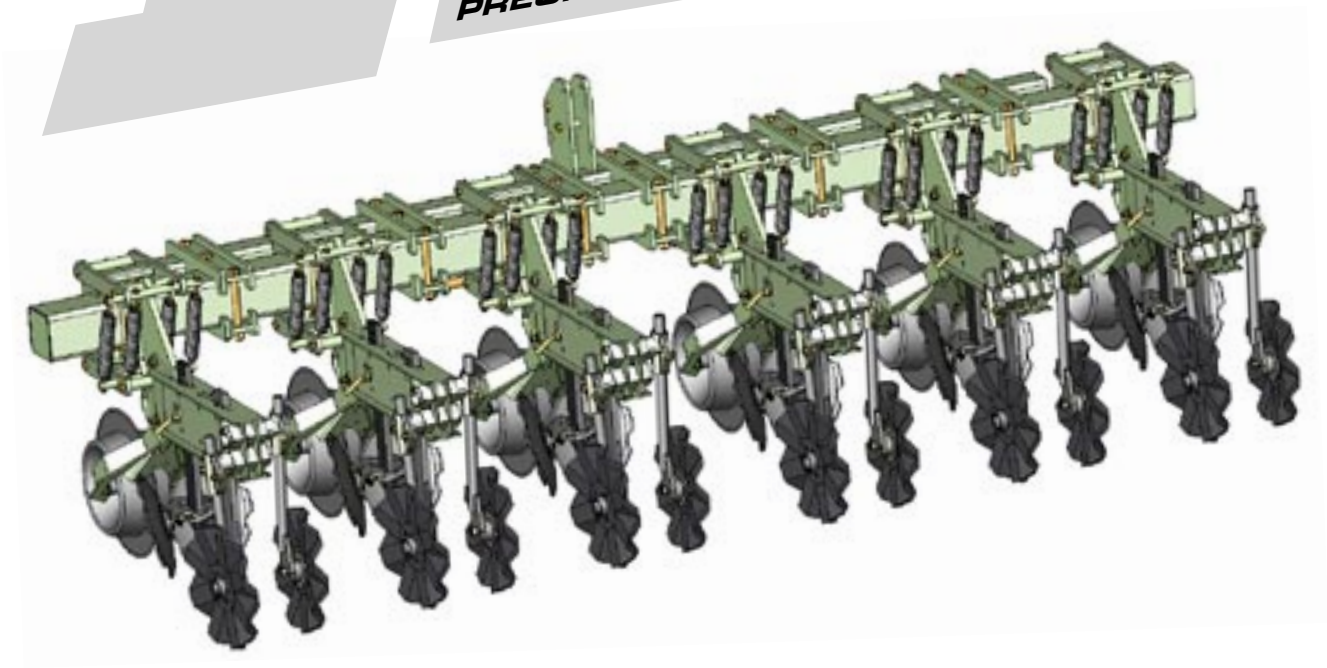

INTRODUCTION

The Orthman ***1tRIPr*** preplant tillage tool combines proven strip-till soil management, precision nutrient placement, and seedbed preparation in a single field pass to provide unprecedented field efficiency. The ***1tRIPr*** name is derived from combining multiple operations to meet preplant objectives while conserving moisture, soil, time, and money, in ***1tRIP.***

The ***1tRIPr*** row unit wraparound mount and parallel linkage provide a durable row unit foundation. The strong foundation, teamed with Orthman's rigid, folding, or stacking toolbars, provides supreme implement strength. Four down pressure springs per row unit supply down pressure to assist with soil penetration. Parallel linkages allow the row unit to operate independent of the toolbar to provide uniform tillage depth despite terrain variations.

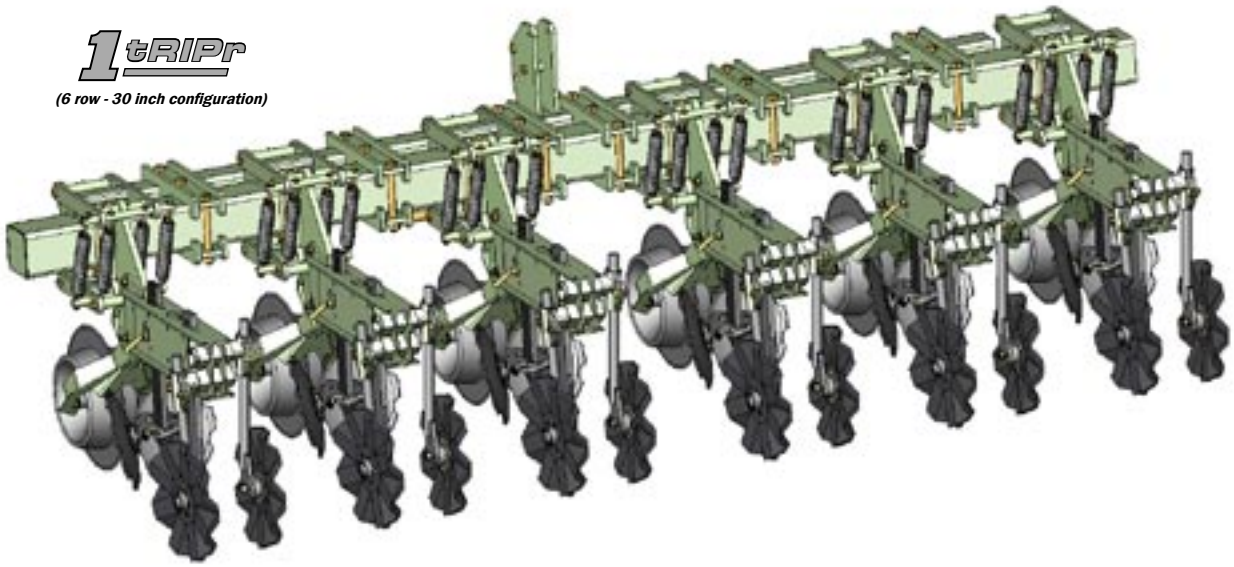

(6 row - 30 inch configuration)

The depth band coulter assembly initiates the strip-till application. The depth band provides consistent row unit tooling depth while the coulter cuts all surface and subsurface residue to reduce rearward tooling interference and aid in residue decomposition. The coulter also reduces side draft by providing lateral implement stability.

The trash opener assembly reduces field residue directly behind the depth band coulter assembly prior to the arrival of rearward tooling.

The tillage shank assembly shatters the root zone compacted layer to increase soil porosity, reduce run off, and allow root systems to utilize deeper soil moisture and nutrients. Tillage shank assembly fertilizer tube(s) allow precision fertilizer placement at two depths, if desired, to provide crop plants with timely fertilizer access to maximize development from germination through maturity.

INTRODUCTION

The wavy coulter assemblies "lift and pinch" action incorporates field residue, decreases soil variability, and firms the seedbed. Optional rearward mounted rolling baskets are available to reduce clod size, retain existing soil moisture, firm, and complete the seedbed.

The ***1tRIPr*** utilized with a Combo Caddy or attachment package attaches the planter and ***1tRIPr*** to maximize each field pass. Contact your Orthman dealer for Combo Caddy or attachment package information to meet your needs. The ***1tRIPr*** can also be utilized as a stand-alone preplant tillage and precision nutrient placement tool.

NOTE: *If combining strip-tillage and planting operations with a Combo Caddy or attachment package, lateral offset of the **1tRIPr** row unit relative to seed placement is recommended to allow fertilizer placement without detriment to seed germination.*

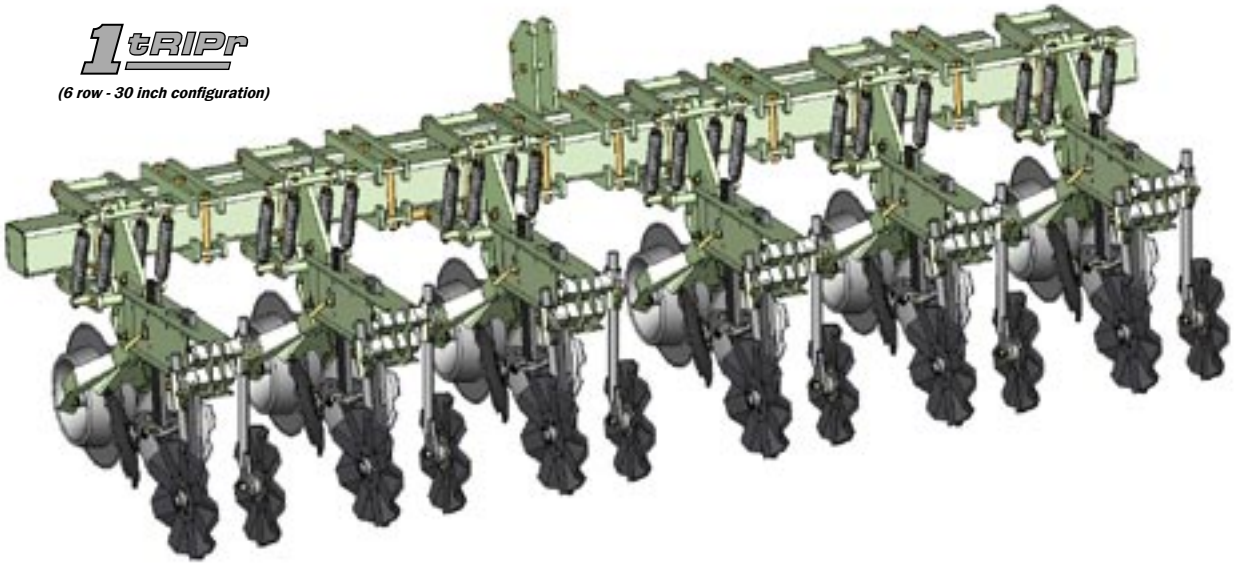

(6 row - 30 inch configuration)

This manual is considered to be an integral component of the ***1tRIPr*** and is designed to educate the owner and/or operator(s) regarding safety, operation, maintenance, troubleshooting, and component identification. All personnel involved in the operation of this implement are responsible for reading and understanding entire manual content. This manual is designed to keep the operator safe and knowledgeable as well a prolong the life of the implement and maximize field efficiency. This manual should accompany the implement if it were ever to be sold.

We would like to thank you for placing your confidence in Orthman Mfg., Inc. Your ***1tRIPr*** is manufactured to meet the highest standards and is built with precision and strength to increase your agricultural operation's dependability and profitability.

Thank you for choosing Orthman.

STILL THE STRONGEST

WARRANTY

Orthman Mfg., Inc. warrants the whole goods products it manufactures to be free from defects in material or workmanship for a period of one (1) year from the date of sale of the product(s) to the original user. Products not manufactured, but supplied by Orthman Mfg., Inc. on Orthman products, are subject to, conform with, and are limited to the warranty of our suppliers.

Orthman Mfg., Inc. warrants the parts it manufactures to be free from defects in material or workmanship for a period of ninety (90) days from the date of delivery of the product(s) to the original user. Products not manufactured, but supplied by Orthman Mfg., Inc. on Orthman products, are subject to, conform with, and are limited to the warranty of our suppliers.

Warranty of Orthman whole goods and/or parts applies only to material and workmanship. Misuse, misapplication, neglect, alteration, accident, normal wear, or acts of God affecting Orthman products are not eligible for warranty.

Warranty of serial numbered goods will only be considered if the product has a completed Warranty Registration on file at Orthman. This Warranty Registration must be completed and returned to Orthman within thirty (30) days of the sale of the product(s) to the original user. ***No serial numbered goods or related parts and/or labor will be warranted without a Warranty Registration on file.*** Warranty issues falling within the first thirty days of a product's use will be handled at the discretion of Orthman. Warranty of parts will not require a Warranty Registration, but proof of date of delivery of the product to the original customer must be provided.

WARRANTY CLAIMS: A warranty claim and request to return defective product(s) must be presented to the Orthman Service Department by the selling dealer describing the defect in material or workmanship of an Orthman product(s) within ten (10) days of its discovery. This claim may be made via phone, e-mail, fax, or written request. Claims for warranty of serial numbered goods must include the Orthman product serial number and model number. Claims for warranty of parts will not require a product serial number or model number, but must be identified by an Orthman part number. Claims for warranty of whole goods or parts must also include proof of date of sale of the product to the original customer by an Orthman dealer.

The Orthman Service Department will proceed in making a preliminary decision as to the eligibility of the claim for warranty consideration. After the Orthman Service Department deems it necessary to proceed with warranty consideration, a Return Goods Authorization (RGA) will be completed by the Orthman Service Department in conjunction with the selling dealer. Upon completion of the RGA, the defective product(s) must be returned to Orthman to ensure warranty consideration. Defective product(s) must be returned to Orthman by either the selling dealer or the customer. Customer delivery of defective product(s) must be approved by Orthman and the selling dealer prior to delivery. The defective product(s) in question must be sent, freight prepaid, within sixty (60) days of the discovery of the product(s) failure and initial warranty claim. Replacement product(s) may be sent to the selling dealer, directly to the customer, or picked up at the Orthman facility. Replacement product(s), sent directly to the customer or picked up must be approved by Orthman and the selling dealer. At the discretion of the Orthman Service Department, replacement product(s) may be sent prior to, or after, the Orthman Service Department receives the defective product(s).
Any variation in the above procedure is at the sole discretion of the Orthman Service Department.

No products will be accepted at Orthman without all proper paperwork completed including Warranty Registration and RGA(s). Parts returned to Orthman without proper authorization will be returned to the sender at the sender's expense.

Orthman agrees to handle all warranty claims in a timely manner and will inform dealers of any revisions or modifications to the Orthman Warranty Policy. Eligible warranty claims will be processed by Orthman within sixty (60) days of receiving failed product(s) or a valid service or repair labor claim. Eligible warranty claims regarding returned product(s) or service and/or repair labor will be paid through a credit memo issued to the appropriate dealer's account as determined by the Orthman Service Department.

If a warranty claim is found to be ineligible for warranty coverage, the Orthman Service Department will be responsible to inform the dealer in order to determine the course of action to be taken. Orthman reserves the right to make changes in specification and design without notice and without incurring any obligations to owners of products previously sold.

TABLE OF CONTENTS

INTRODUCTION

⚠ IMPORTANT SAFETY INFORMATION

PREPARATION AND SETUP

TOOLING OPTIONS AND INSTALLATION

TABLE OF CONTENTS

FIELD SETTINGS

TROUBLESHOOTING

MAINTENANCE

⚠ IMPORTANT SAFETY INFORMATION ⚠

SAFETY ALERT SYMBOL

The ***SAFETY ALERT SYMBOL*** warns of potential hazards to personal safety and that extra precautions must be taken. When you see this symbol, carefully read the message(s) that follow. Follow all recommended precautions and safe operating practices in this manual.

NOTE: *Hazard control and accident prevention are dependent upon safety awareness and proper training of personnel involved in the operation of this implement.*

⚠ BE AWARE OF SIGNAL WORDS

SIGNAL WORDS designate a degree or level of ***HAZARD*** seriousness. These ***SIGNAL WORDS*** include:

DANGER

RED

DANGER indicates a hazardous situation that, if not avoided, will result in death or serious injury. ***DANGER*** is limited to extreme situations, typically for machine components which, for functional purposes, cannot be guarded.

WARNING

ORANGE

WARNING indicates a potentially hazardous situation that, if not avoided, could result in death or serious injury. ***WARNING*** includes hazards that are exposed when safety guards are removed. ***WARNING*** may also be used to alert against unsafe practices.

CAUTION

YELLOW

CAUTION indicates a potentially hazardous situation that, if not avoided, may result in minor or moderate injury. ***CAUTION*** may also be used to alert against unsafe practices.

⚠ SHUTDOWN AND STORAGE

AVOID CRUSHING. Make sure all personnel are clear of the implement. Lower implement to the ground, place tractor in park, turn off engine, and remove key.

USE BAR STANDS TO SUPPORT THE IMPLEMENT. Store implement on a clean, dry, and level surface. An uneven surface could cause implement to shift or fall, resulting in injury or death, as well as implement damage. Securely support all implement components that must be raised. Store implement away from human activity.

FOR YOUR PROTECTION

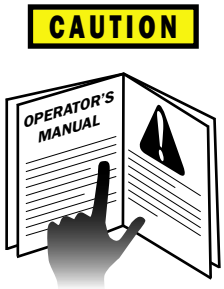

READ AND UNDERSTAND ENTIRE MANUAL CONTENT BEFORE OPERATING OR SERVICING IMPLEMENT. Read and understand operator manuals for machinery used in conjunction with the ***1tRIPr***.

Carefully ***READ ALL SAFETY DECALS*** in this manual as well as on the implement. Keep implement clean so decals are easily visible. Keep all safety decals in good, clean, and legible condition. Immediately replace damaged and/or missing decals. Replacement decals are available from your Orthman dealer.

Learn to operate the implement and all components properly. Do not let others operate implement without proper instruction. Unauthorized implement modifications may impair function and safety. If you do not understand any content in this manual or need assistance, contact your Orthman dealer.

(Orthman Manufacturing Inc. - 75765 Rd. 435 - Lexington, NE 68850 - (308) 324-4654)

EQUIPMENT SAFETY GUIDELINES

Operator safety is the primary concern when designing an Orthman implement. Orthman integrates as many safety features into the implement as possible. Operators can avoid many hazards and possible accidents by observing precautions in this safety section.

Insist that yourself, and personnel working with and around you, follow all safety precautions. Be cautious when working with or around implement to avoid injury.

SAFE TRANSPORT

- Engage transport locking devices prior to transport.
- Plan your route to avoid traffic. Yield to traffic in all situations.
- Maximum transport speed is 20 mph (32 kph). Various conditions will require reduced speeds. Travel at speeds that allow for adequate control of stopping and steering.

- ***AVOID ELECTROCUTION.*** Be aware of overhead power lines. Contact or close proximity to power lines can result in injury or death. Use extreme care when operating implement near power lines.
- Know implement transport height and gross weight. Avoid overhead obstructions not allowing your transport height. Do not use bridges rated below combined (implement and tractor) weight.

- Make sure a slow moving vehicle (SMV) placard is mounted to the implement and is visible to other motorists.
- Make allowances for implement size when transporting. Sudden braking can cause a towed load to swerve and/or rollover. Never use independent braking with implement in tow as loss of control and/or rollover can result. Reduce speed if towed implement is not equipped with brakes.

- Do not coast. Always keep tractor or towing vehicle in gear to provide engine braking when traveling downhill.
- Comply with state and local laws governing implement transport.

WARNING AND SAFETY LIGHTS

- Oversized implements and slow moving vehicles create a hazard when transported on public roads.

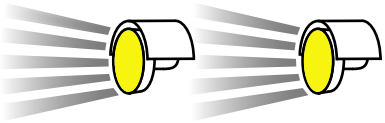

- Make sure all warning, safety lights, and turning signals are working and clean. Use safety lighting when using public roads day and night. Replace missing or damaged lights immediately. Comply with state and local laws governing implement safety lighting.
- A safety lighting package, conforming to implement lighting standard ANSI/ASAE S279.12, is available for addition to the ***1tRIPr***. Contact your Orthman dealer for safety lighting package information. Refer to toolbar operator's manual for safety lighting package installation and adjustment.

SAFE OPERATION

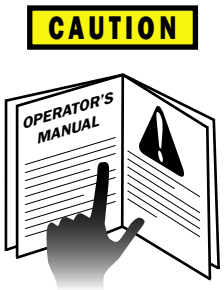

- ***READ AND UNDERSTAND ENTIRE MANUAL CONTENT BEFORE OPERATING OR SERVICING IMPLEMENT.*** Implement is to be operated by qualified personnel only. Never let children operate implement. A complete understanding of safety precautions, operation, and maintenance is mandatory before implement use.

- ***AVOID ELECTROCUTION.*** Be aware of overhead power lines. Contact or close proximity to power lines can result in injury or death. Use extreme care when operating implement near power lines.
- Know implement transport height and gross weight. Avoid overhead obstructions not allowing your transport height. Do not use bridges rated below your combined (implement and tractor) weight.

- ***AVOID ROLLOVER.*** Do not fold or unfold implement and avoid sharp turns when on a hillside, as shift of weight could cause rollover. Operate implement at a safe distance from terrain irregularities and other obstructions that could cause rollover.

- ***AVOID CRUSHING.*** Make sure all personnel are clear of implement at all times implement is in motion. Be aware of obstructions above, below, and around implement when in operation or transport. Injury or death can result from being struck by the implement.

NO RIDERS

NEVER ALLOW RIDERS ON TRACTOR OR IMPLEMENT. Riders hinder operator visibility and can be thrown from the implement and/or be struck by foreign objects resulting in injury or death.

PRACTICE SAFE MAINTENANCE

- Proper maintenance is your responsibility. Maintenance neglect and/or poor maintenance practices can result in injury or death. Always use the proper tools to maintain implement.

- ***AVOID CRUSHING.*** Make sure all personnel are clear of the implement. Lower implement to the ground, place tractor in park, turn off engine and remove key.

- ***USE BAR STANDS TO SUPPORT THE IMPLEMENT.*** Park implement on a clean, dry, and level surface. An uneven surface could cause implement to shift or fall, resulting in injury or death, as well as implement damage. Securely support all implement components that must be raised. Remove buildup of grease, oil, or debris prior to maintaining implement.

- ***AVOID ENTANGLEMENT.*** Never lubricate or service implement in motion. Keep away from power driven parts when in motion. Disengage power sources prior to maintaining implement. Injury or death can result from contact with power driven parts when in motion.

- ***AVOID CRUSHING.*** Do not stand between the tractor and implement when connecting or disconnecting implement. Injury or death can result from being trapped between the tractor and implement.

- Escaping pressurized hydraulic fluid can pentrate skin, resulting in injury or death. Relieve hydraulic system pressure before connecting or disconnecting tractor. Use cardboard or wood, ***NOT BODY PARTS***, to check for suspected hydraulic leaks. Wear protective gloves and safety glasses or goggles when working with hydraulic systems. If an accident occurs, see a doctor immediately for proper treatment.

PRACTICE SAFE MAINTENANCE

- Never operate a combustion engine in an enclosed area. Make sure there is adequate ventilation. Exhaust fumes can cause asphyxiation.

- Be extremely careful working around unshielded sharp edges. Injury may result from contact with sharp edges.
- Keep all parts in good condition and properly installed. Replace damaged or missing parts immediately.
- Remove tools and unused parts prior to implement operation.

PREPARE FOR EMERGENCIES

- Be prepared for a fire. Keep a readily accessible fire extinguisher at all times.
- Keep a readily accessible stocked first aid kit and emergency phone numbers for your doctor, hospital, ambulance, and fire department.
- Wear protective clothing and equipment. Wear clothing appropriate for the situation. Protect your eyes, ears, hands, and feet with the use of protective goggles, ear plugs, gloves, boots, etc.

ANHYDROUS AMMONIA - NH_3

- ***ANHYDROUS AMMONIA (NH_3) APPEARS HARMLESS. DIRECT EXPOSURE TO NH_3 IS EXTREMELY DANGEROUS AND CAN RESULT IN INJURY AND/OR DEATH.***
- Keep a readily accessible clean supply of water in case of exposure to NH_3.
- Wear protective goggles and gloves when working around NH_3. Be sure all personnel involved in the operation are properly trained concerning all dangers and precautions involved in the application of NH_3 or liquid fertilizer.
- If you choose to apply NH_3, it is advisable to consult documented information regarding safe handling and application of NH_3. Information is available from the following recognized sources:

1. American National Standards Institute - ANSI - *www.ansi.org - (212) 642-4900*
2. Material Safety Data Sheets - MSDS - *www.msdsonline.com*
3. National Safety Council - *www.nsc.org/necas*
4. The Fertilizer Institute - *www.tfi.org*
5. United States Department of Transportation - D.O.T. - *www.dot.gov*
6. Compressed Gas Association - *www.cganet.com*

SAFETY NEVER HURTS

READ AND UNDERSTAND ENTIRE MANUAL CONTENT BEFORE OPERATING OR SERVICING IMPLEMENT.

- Understand all implement functions.
- Never stand between tractor and implement when connecting or disconnecting implement.
- Be aware of all surroundings before moving implement.
- Operate implement from operator's seat only.
- Never mount or dismount a moving tractor.
- Never leave engine running when implement is unattended.
- Keep away from power driven parts when in motion.
- Make sure all personnel are clear before lowering implement to the ground.

SAFETY DECALS

DANGER

WARNING

CAUTION

Safety decals promote awareness and knowledge concerning safe operation and maintenance of the implement.

Carefully ***READ ALL SAFETY DECALS*** in this manual as well as on the implement. Keep implement clean so decals are easily visible. Keep all decals in good and legible condition. Immediately replace damaged and/or missing decals. Replacement decals are available from your Orthman dealer.

NOTE: *To install decals: Thoroughly clean area where decal is to be placed and attach decal void of bubbles. Refer to this safety information section for proper decal placement.*

IMPORTANT

Equipment operators should understand the enclosed manual before operating this equipment. Replacement manual, call 308-324-4654

Orthman Mfg., Inc. - 75765 Rd. 435 - Lexington, NE 68850

153-101

(manual enclosure)

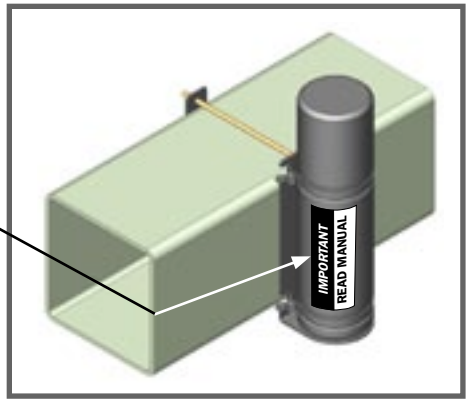

153-152

(side of tillage and trash opener shanks)

CAUTION

Be extremely careful working around unshielded sharp edges. Injury may result from contact with sharp edges.

153 - 045

(outer side of outer row units)

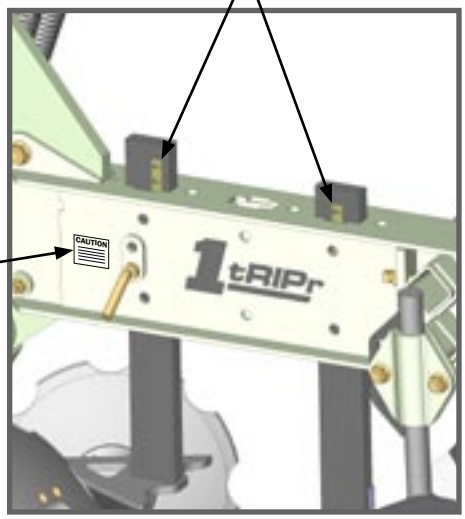

ORTHMAN DECALS

153-000

(front right and rear left of toolbar)

153-194

(front left and rear right of toolbar)

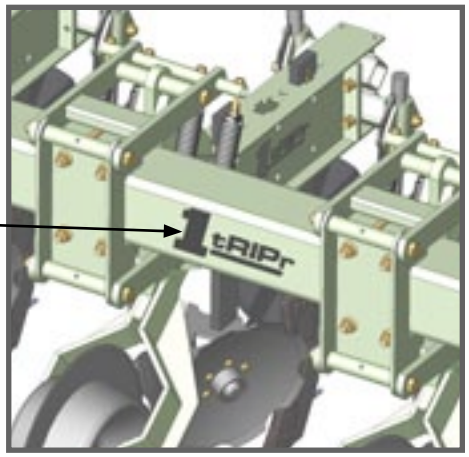

153-193

(outer side of outer row units)

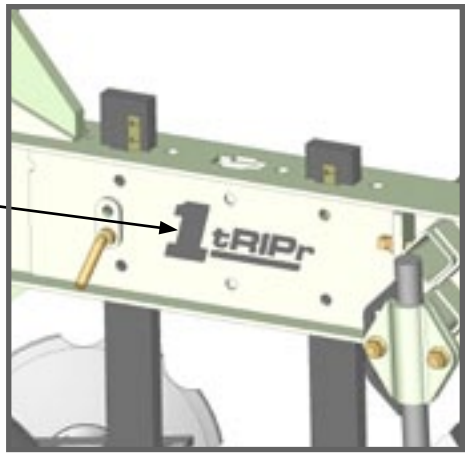

PREPARATION AND SETUP

SHIPPING CONFIGURATION

The majority of the ***1tRIPr*** is assembled at Orthman Mfg., Inc. The ***1tRIPr*** is assembled in an appropriate shipping configuration to ensure transport safety and efficiency from the manufacturer. Installation of optional tooling (if applicable) is necessary prior to an initial field trial.

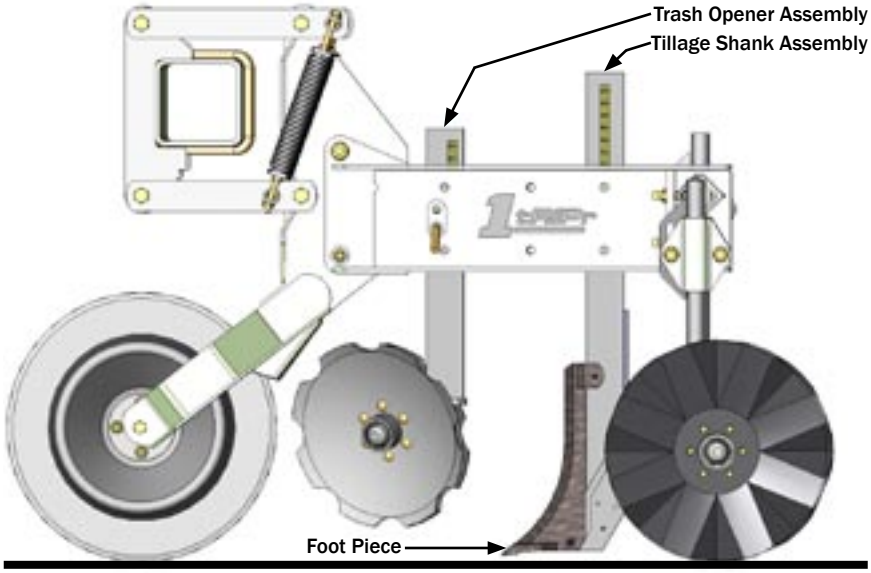

The shipping configuration provides even implement weight distribution between the depth band coulter assembly and the wavy coulter assemblies. The trash opener assembly and the tillage shank assembly do not bear implement weight, as illustrated above.

CAUTION

Be extremely careful working around unshielded sharp edges. Injury may result from contact with sharp edges.

153 - 045

Prior to off-season storage, it is recommended to restore the ***1tRIPr*** row units to the shipping configuration illustrated above to avoid placing weight on the trash opener or tillage shank assembly. When storing in-season, lower implement very slowly to avoid sharp impact between the storage surface and the tillage shank assembly foot piece.

NOTE: *The tillage shank assembly foot piece consists of a hard material to decrease wear and improve field performance. Due to material hardness, sharp impact, excessive weight, etc. can damage the tillage shank assembly foot piece.*

PREPARING THE 1tRIPr

- Tooling options available for added ***1tRIPr*** versatility are illustrated and explained in the tooling options section of this manual. Field adjustments are illustrated and explained in the field settings section of this manual.

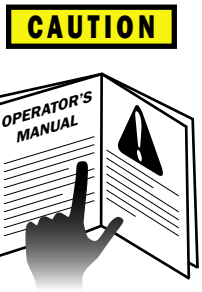

- If an Orthman toolbar is used in conjunction with ***1tRIPr*** row units, be sure to consult the toolbar operator's manual before attempting to operate the implement. Read and understand operator manuals for machinery used in conjunction with the ***1tRIPr***.

- Before each use, check hardware for wear and proper torque. Replace damaged or missing hardware with hardware of an identical grade to restore implement to original specifications.

IMPLEMENT TO TRACTOR CONNECTION

- ***AVOID CRUSHING.*** Do not stand between tractor and implement when connecting or disconnecting implement. Injury or death can result from being trapped between the tractor and implement.

- ***AVOID CRUSHING.*** Make sure all personnel are clear of the implement. Lower implement to the ground, place tractor in park, turn off engine, and remove key.

- ***USE BAR STANDS TO SUPPORT THE IMPLEMENT.*** Park implement on a clean, dry, and level surface. An uneven surface could cause implement to shift or fall, resulting in injury or death, as well as implement damage. Securely support all implement components that must be raised.

STANDARD ROW UNIT COMPONENT IDENTIFICATION

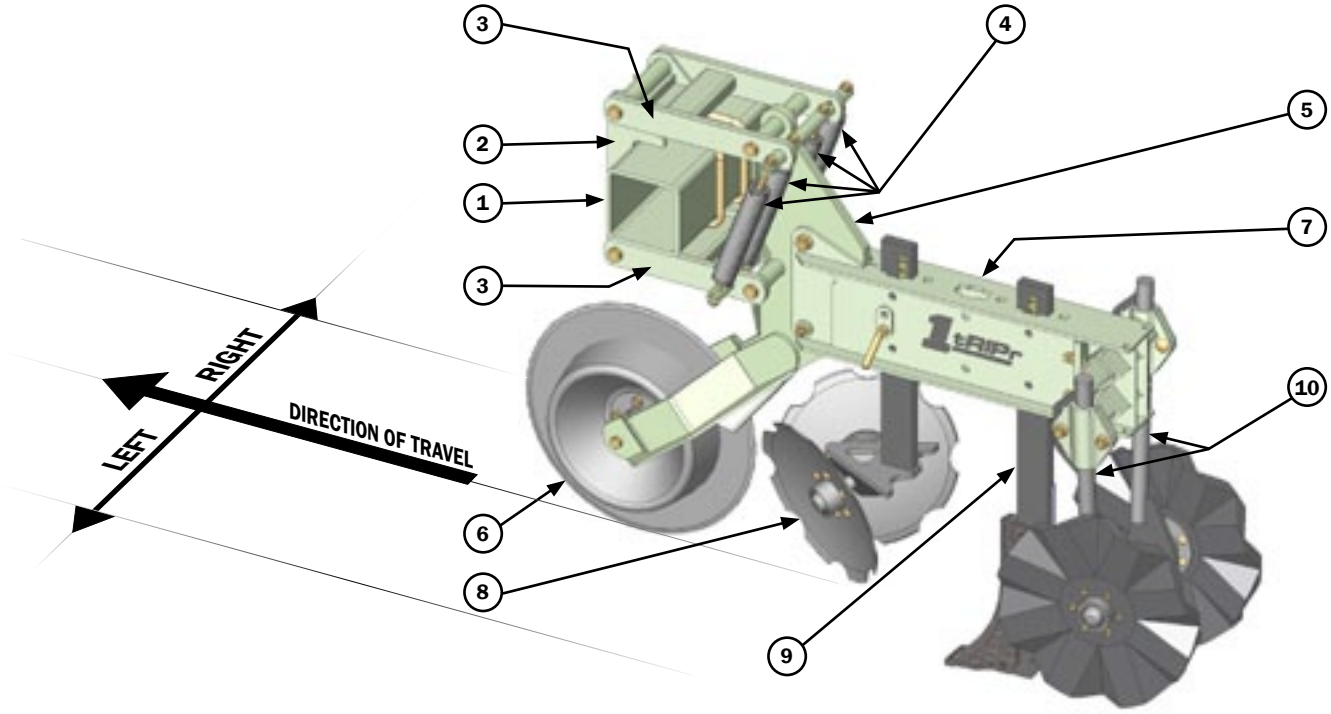

NOTE: *Right and left as illustrated above and referenced from this point on, is determined by facing the same direction the implement will travel while in use.*

1. ***TOOLBAR.*** Proven Orthman toolbar design provides unmatched strength.
2. ***MOUNT.*** A wraparound mount provides a long lasting row unit foundation.
3. ***PARALLEL LINKAGES.*** Parallel linkages, with the ability to travel vertically, allow the row units to operate independent of the toolbar to allow uniform tillage depth despite terrain variations.
4. ***DOWN PRESSURE SPRINGS.*** Four adjustable down pressure springs per row unit supply down pressure to assist with row unit tooling soil penetration.
5. ***MAINFRAME.*** The row unit mainframe serves as the primary mount for row unit tooling.
6. ***DEPTH BAND COULTER ASSEMBLY.*** The depth band provides consistent row unit tooling depth while the coulter cuts surface and subsurface residue.
7. ***TAIL SECTION.*** The tail section houses adjustable tooling.
8. ***TRASH OPENER ASSEMBLY.*** The trash opener reduces field residue directly behind the depth band coulter prior to the arrival of rearward tooling.
9. ***TILLAGE SHANK ASSEMBLY.*** The tillage shank assembly *(mole shank or mole knife)* shatters the root zone compacted layer, while allowing precision fertilizer placement at two depths, if desired.
10. ***WAVY COULTER ASSEMBLIES.*** Wavy coulter assemblies provide "lift and pinch" action to incorporate field residue, till, and firm the seedbed.

TOOLING OPTIONS AND INSTALLATION

ROLLING BASKET ASSEMBLY

An optional rolling basket assembly is available to complement the ***1tRIPr*** row unit. Rolling baskets reduce clod size, retain existing soil moisture, firm, and complete the optimum seedbed. The rolling basket is mounted to the rear of the row unit tail section.

INSTALLATION - ROLLING BASKET ASSY.

DANGER

- ***AVOID CRUSHING.*** *Make sure all personnel are clear of the implement. Lower implement to the ground, place tractor in park, turn off engine, and remove key.*
- ***USE BAR STANDS TO SUPPORT THE IMPLEMENT.*** *Park implement on a clean, dry, and level surface. An uneven surface could cause implement to shift or fall, resulting in personal injury or death, as well as implement damage. Securely support all implement components that must be raised. Remove buildup of grease, oil, or debris prior to installing the rolling basket.*

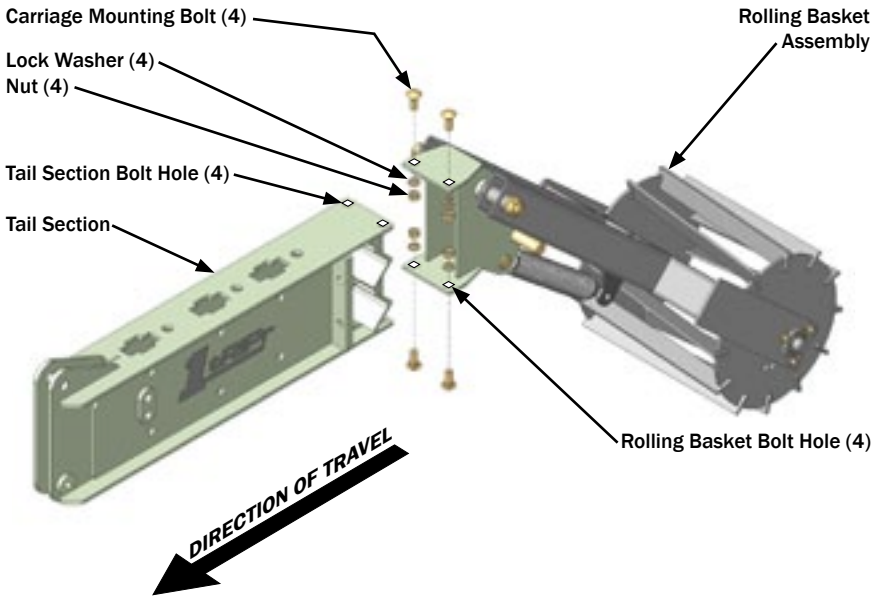

CAUTION

Be extremely careful working around unshielded sharp edges. Injury may result from contact with sharp edges.

153 - 045

1. Align tail section and rolling basket bolt holes.
2. Mount rolling basket assembly to tail section with carriage mounting bolts, lock washers, and nuts.
3. Tighten all hardware to proper torque specifications. *(pg. 7 - 4)*

NOTE: *Due to clearance issues, rolling baskets cannot be used in conjunction with a Combo Caddy or planter attachment package. A lift assist wheel extension package is available to utilize rolling baskets and lift assist wheels simultaneously. Contact your Orthman dealer for lift assist wheel extension package information to alleviate clearance issues.*

MOLE SHANK ASSEMBLY

The mole shank assembly provides benefits to maximize strip-till soil management. The foot piece shatters the root zone compacted layer to increase soil porosity, reduce run off, and allow root systems to utilize deeper soil moisture and nutrients.

NOTE: *A depth indicator allows for uniform mole shank assembly depth between row units. Depth indicator decal does not reflect actual tillage depth. Use depth indicator decal as a tool to achieve uniform depth across the implement.*

Fertilizer tube(s) allow precision fertilizer placement at two depths, if desired. Precision fertilizer placement provides crop plants with timely fertilizer access to maximize development from germination through maturity.

If combining strip-tillage and planting operations with a Combo Caddy or attachment package, lateral offset of the ***1tRIPr*** row unit relative to seed placement is recommended to allow fertilizer placement without detriment to seed germination.

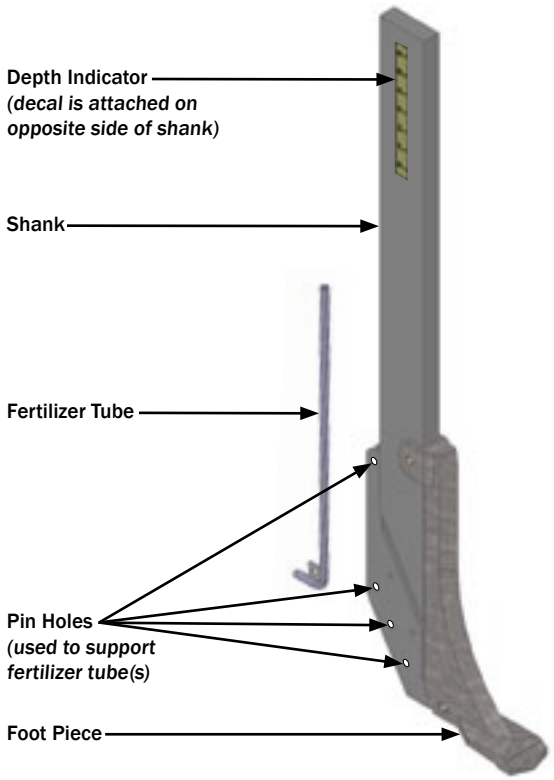

NOTE: *Refer to (pg. 4 - 4) for mole shank assembly installation instructions. Refer to (pg. 4 - 5) for fertilizer tube installation instructions. Contact your Orthman dealer for additional fertilizer tubes to place fertilizer at two depths.*

MOLE KNIFE ASSEMBLY

The mole knife assembly provides benefits to maximize strip-till soil management. The knife shatters the root zone compacted layer to increase soil porosity, reduce run off, and allow root systems to utilize deeper soil moisture and nutrients. The fertilizer knife clamp shear bolt provides mole knife shear protection.

NOTE: *A depth indicator allows for uniform mole knife assembly depth between row units. Depth indicator decal does not reflect actual tillage depth. Use depth indicator decal as a tool to achieve uniform depth across the implment.*

Fertilizer tube(s) allow precision fertilizer placement at two depths, if desired. Precision fertilizer placement provides crop plants with timely fertilizer access to maximize development from germination through maturity.

If combining strip-tillage and planting operations with a Combo Caddy or attachment package, lateral offset of the ***1tRIPr*** row unit relative to seed placement is recommended to allow fertilizer placement without detriment to seed germination.

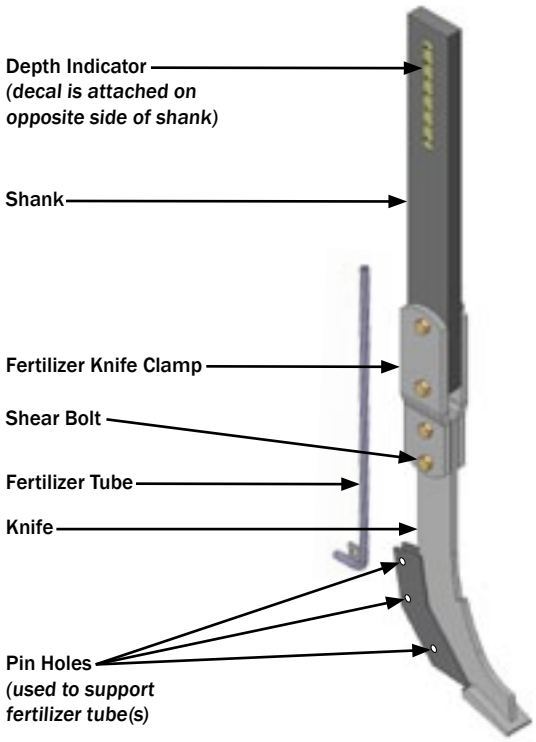

NOTE: *Refer to (pg. 4 - 4) for mole knife assembly installation instructions. Refer to (pg. 4 - 6) for fertilizer tube installation instructions. Contact your Orthman dealer for additional fertilizer tubes to place fertilizer at two depths.*

INSTALLATION
TILLAGE SHANK ASSEMBLY

(MOLE SHANK AND MOLE KNIFE)

DANGER

- ***AVOID CRUSHING.*** *Make sure all personnel are clear of the implement. Lower implement to the ground, place tractor in park, turn off engine, and remove key.*
- ***USE BAR STANDS TO SUPPORT THE IMPLEMENT.*** *Park implement on a clean, dry, and level surface. An uneven surface could cause implement to shift or fall, resulting in injury or death, as well as implement damage. Securely support all implement components that must be raised. Remove buildup of grease, oil, or debris prior to installing tillage shank assembly.*

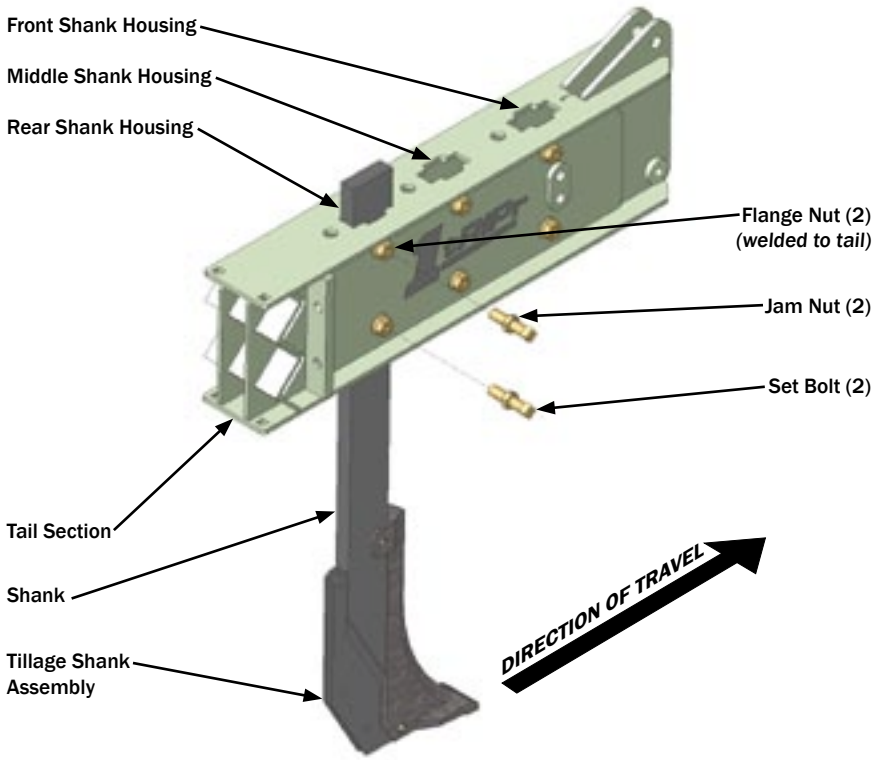

(MOLE SHANK ASSEMBLY PICTURED)

CAUTION

Be extremely careful working around unshielded sharp edges. Injury may result from contact with sharp edges.

153 - 045

1. Loosen jam nuts and set bolts to provide adequate shank housing clearance for the shank to be inserted in the bottom side of the tail.
2. Insert shank into desired shank housing.
3. Tighten set bolts and jam nuts to secure tillage shank assembly to tail section.
4. Tighten hardware to proper torque specifications. *(pg. 7 - 4)*

NOTE: *A depth indicator allows for uniform tillage shank assembly depth between row units. Depth indicator decal does not reflect actual tillage depth. Use depth indicator decal as a tool to achieve uniform depth across the implement.*

NOTE: *The tillage shank assembly can occupy either the front, middle, or rear shank housing locations.*

INSTALLATION
MOLE SHANK ASSEMBLY
FERTILIZER TUBE

- *If you choose to apply NH_3, it is advisable to consult documented information regarding safe handling and application of NH_3. Refer to recognized sources. (pg. 2 - 7)*
- ***AVOID CRUSHING.** Make sure all personnel are clear of the implement. Lower implement to the ground, place tractor in park, turn off engine, and remove key.*
- ***USE BAR STANDS TO SUPPORT THE IMPLEMENT.** Park implement on a clean, dry, and level surface. An uneven surface could cause implement to shift or fall, resulting in injury or death, as well as implement damage. Securely support all implement components that must be raised. Remove buildup of grease, oil, or debris prior to installing fertilizer tube(s).*

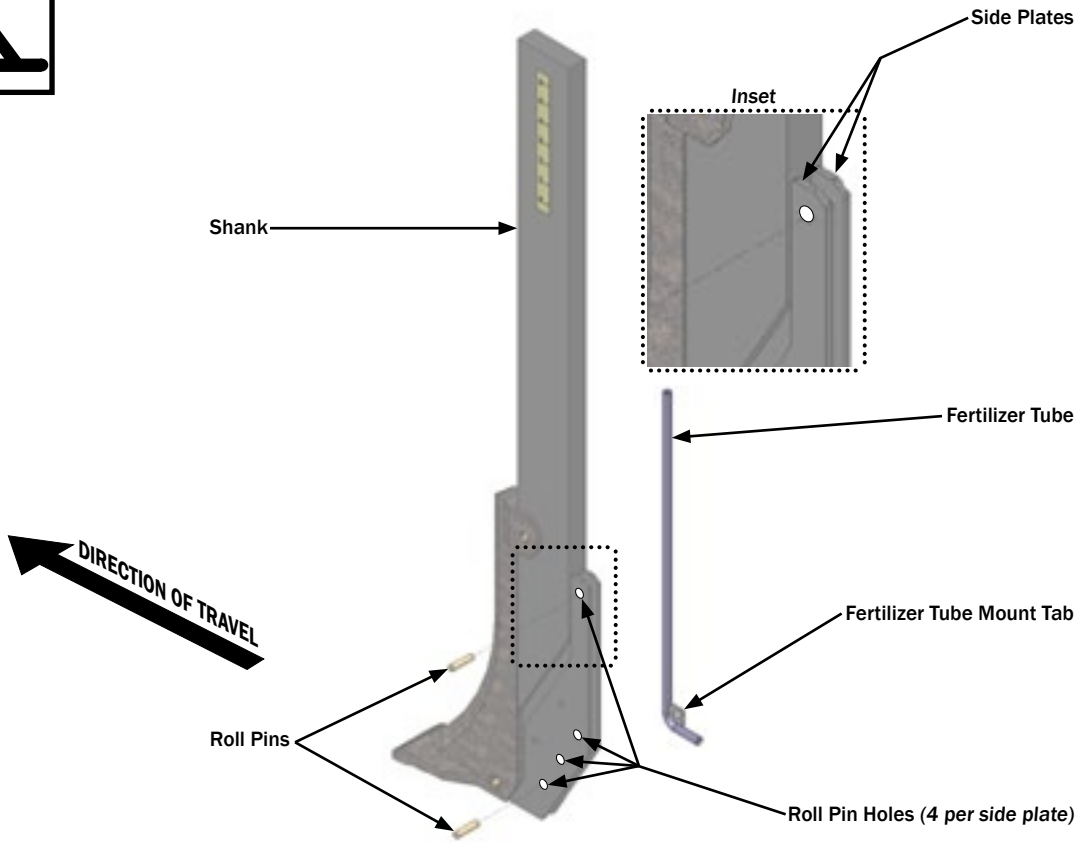

CAUTION

Be extremely careful working around unshielded sharp edges. Injury may result from contact with sharp edges.

153 - 045

1. Distinguish roll pin holes for desired fertilizer placement depth.
2. Insert fertilizer tube between side plates. *(see inset)*
3. Align desired roll pin holes and fertilizer tube mount tab.
4. Insert roll pin through side plate roll pin holes and fertilizer tube mount tab to secure fertilizer tube.

***NOTE:** The uppermost roll pin holes and upper roll pin may be used to support the upper portion of the fertilizer tube. Contact your Orthman dealer for additional fertilizer tubes to place fertilizer at two depths.*

INSTALLATION
MOLE KNIFE ASSEMBLY
FERTILIZER TUBE

- *If you choose to apply NH_3, it is advisable to consult documented information regarding safe handling and application of NH_3. Refer to recognized sources. (pg. 2 - 7)*
- ***AVOID CRUSHING.** Make sure all personnel are clear of the implement. Lower implement to the ground, place tractor in park, turn off engine, and remove key.*
- ***USE BAR STANDS TO SUPPORT THE IMPLEMENT.** Park implement on a clean, dry, and level surface. An uneven surface could cause implement to shift or fall, resulting in injury or death, as well as implement damage. Securely support all implement components that must be raised. Remove buildup of grease, oil, or debris prior to installing fertilizer tube(s).*

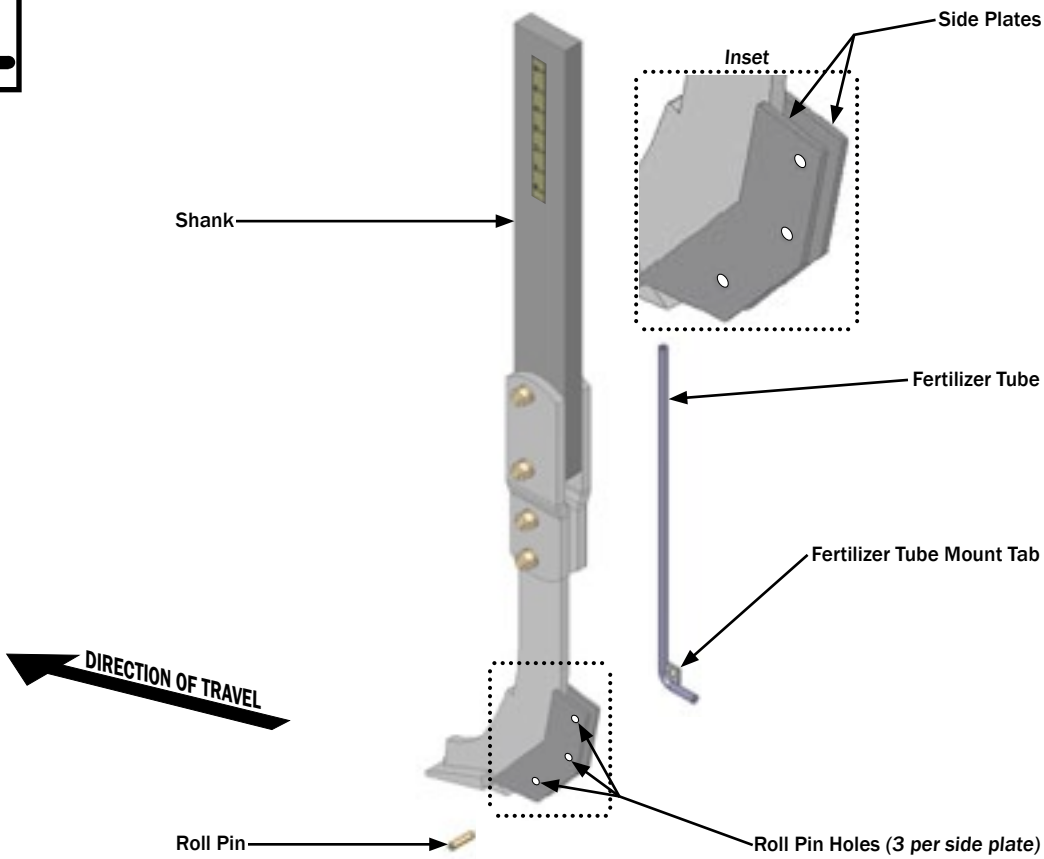

CAUTION

Be extremely careful working around unshielded sharp edges. Injury may result from contact with sharp edges.

153 - 045

1. Distinguish roll pin holes for desired fertilizer placement depth.
2. Insert fertilizer tube between side plates. *(see inset)*
3. Align desired roll pin holes and fertilizer tube mount tab.
4. Insert roll pin through side plate roll pin holes and fertilizer tube mount tab to secure fertilizer tube.

***NOTE:** Contact your Orthman dealer for additional fertilizer tubes to place fertilizer at two depths.*

FIELD SETTINGS

TOOLBAR HEIGHT AND ORIENTATION

- ***PLACE TRACTOR IN PARK AND REMOVE KEY BEFORE DISMOUNTING TRACTOR TO ADJUST IMPLEMENT.***
- ***NEVER ALLOW RIDERS ON TRACTOR OR IMPLEMENT.*** Riders hinder operator visibility and can be thrown from the implement and/or be struck by foreign objects resulting in injury or death.

NOTE: *When setting toolbar height and orientation, disregard row unit performance. Toolbar height and orientation must be established prior to tooling adjustment.*

NOTE: *Make sure the row units are set to shipping configuration. (pg. 3 - 1) The shipping configuration, limited tool to ground engagement, will allow toolbar height and orientation to be easily established.*

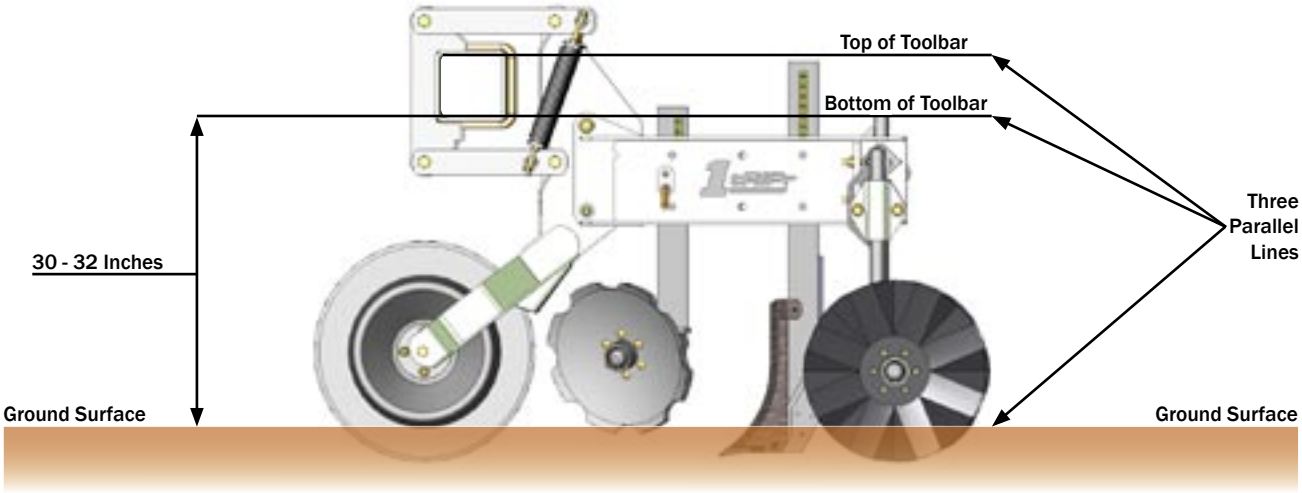

The top and bottom of the toolbar must operate parallel with the ground surface. Adjustment of tractor three point third link, lift assist wheels, and/or toolbar gauge wheels, if equipped, will allow the toolbar to operate parallel with the ground surface.

The bottom of the toolbar should operate approximately 30 - 32 inches above the ground surface. Use tractor lower hitch stop, lift assist wheels, and/or toolbar gauge wheels, if equipped, to set desired toolbar height.

Have an assistant pull the tractor and implement slowly forward in the field position as you view the end of the toolbar from a safe distance. Observe toolbar height and orientation while in operation. Make adjustments accordingly until the top and bottom of the toolbar operate parallel with the ground surface and the bottom of the toolbar operates approximately 30 - 32 inches above the ground surface. *(as pictured above)*

TOOLBAR HEIGHT AND ORIENTATION

After desired toolbar height and orientation is established, set tractor lower hitch stop, lift assist wheels, and/or toolbar gauge wheels, if equipped.

NOTE: *Larger implements may require lift assist wheels and/or toolbar gauge wheels to support toolbar weight. Lift assist wheels and/or toolbar gauge wheels displace a portion of toolbar weight to allow maximum parallel linkage travel.*

NOTE: *Smaller implements may operate without lift assist wheels and/or toolbar gauge wheels. The tractor hitch will bear a portion of the toolbar weight by setting a lower hitch stop on the tractor three point hitch control.*

ROW UNIT DEPTH

Effectively, the depth band coulter assembly provides consistent row unit tooling depth by governing soil penetration. Adjustable down pressure springs supply row unit down pressure to assist with row unit soil penetration. Parallel linkages, with the ability to travel vertically, allow row units to operate independent of the toolbar. The depth band, down pressure springs, and parallel linkages should allow the toolbar serve as a towing device allowing uniform tillage despite terrain variations.

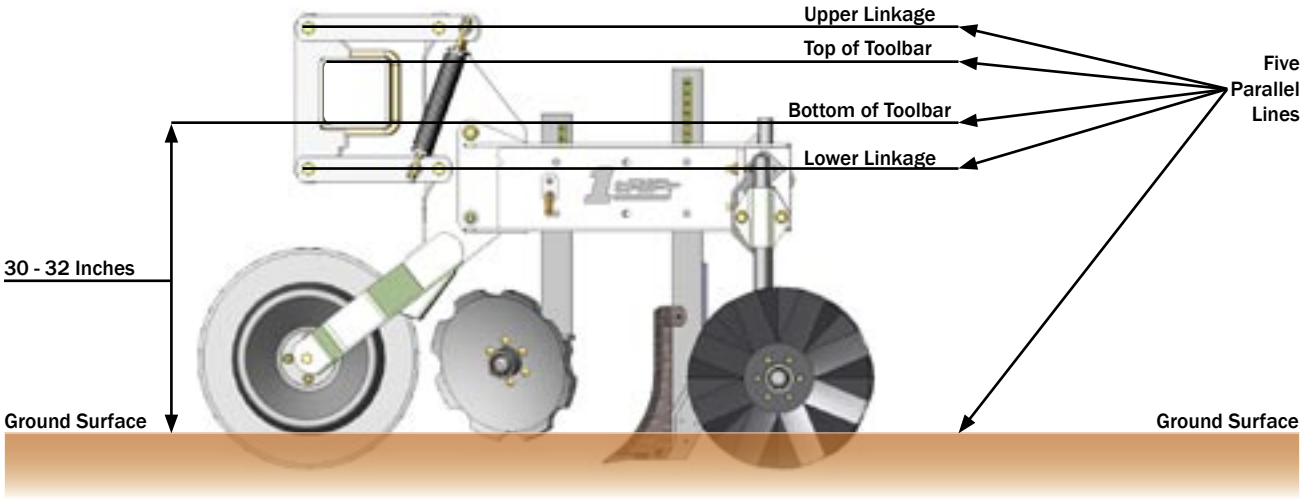

For the toolbar to serve as a towing device, the ground surface, lower linkage, bottom of toolbar, top of toolbar, and upper linkage must generally operate parallel to one another when in the field position.
The depth band coulter assembly should allow the toolbar to operate at the desired height and provide consistent row unit tooling depth by governing soil penetration. It is important to arrive at the setting illustrated above so further tooling adjustments will be uniform.

ROW UNIT DOWN PRESSURE

Four adjustable down pressure springs supply row unit down pressure to assist with row unit tooling soil penetration. After toolbar height and orientation is set *(pg. 5 - 1, 5 - 2)* row unit down pressure can be adjusted.

Down pressure springs should be adjusted so that parallel linkages operate independent of the toolbar and the toolbar serves as a towing device. Compacted soil conditions may require an increase in down pressure and softer soil conditions may require a decrease in down pressure to provide adequate soil penetration across the implement.

If a rigid toolbar is used with the ***1tRIPr*** row units, down pressure adjustment between row units typically varies slightly. If a folding or stacking toolbar is used, wing sections tend to float upward, unless mechanically restrained. *(refer to toolbar operator's manual)* Wing row units, not mechanically restrained, may require a decreased amount of down pressure to allow row units for perform consistently across the implement.

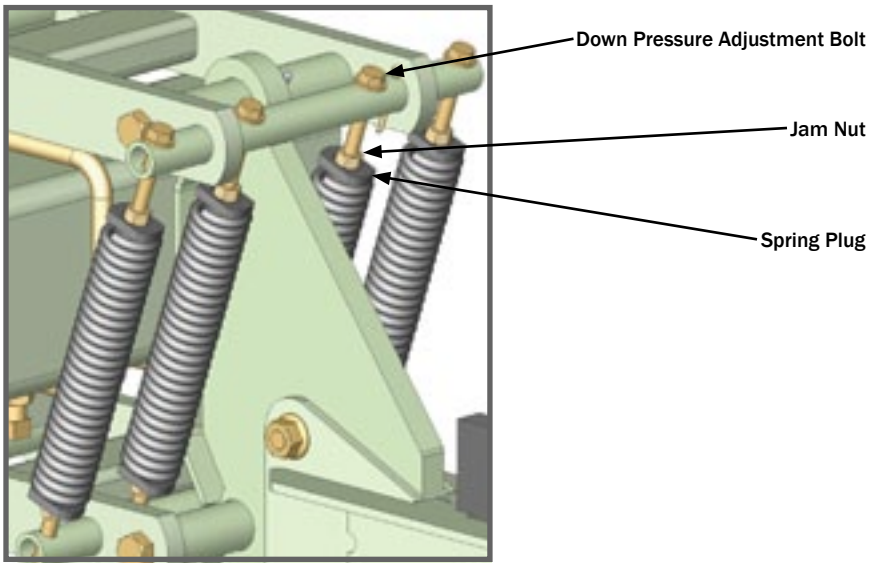

NOTE: *Recommended tools: Down Pressure Adjustment Bolt and Jam Nut - 3/4 end wrench, Spring Plug - 1 1/4 end wrench.*

NOTE: *Adjust all four down pressure springs per row unit evenly.*

⚠ CAUTION

Be extremely careful working around unshielded sharp edges. Injury may result from contact with sharp edges.

153 - 045

1. Loosen jam nut from spring plug.
2. Adjust down pressure adjustment bolt.
   (clockwise - increase pressure, counterclockwise - decrease pressure)
3. Tighten jam nut against spring plug to torque specifications. *(pg. 7 - 4)*

NOTE: *Too much down pressure applied to the individual row units can essentially lift the toolbar to an undesireable operating height. Lifting the toolbar will cause the parallel linkages to "bottom out" and the row units will not operate independent of the toolbar resulting in non-uniform tillage across the implement.*

TRASH OPENER ASSEMBLY DEPTH

The trash opener assembly reduces field residue directly behind the depth band coulter assembly prior to the arrival of rearward tooling. The trash opener assembly can be vertically pin adjusted *(1/2 inch increments)* for coarse adjustment. Set bolts and jam nuts allow for finite vertical adjustment.

- ***AVOID CRUSHING.*** *Make sure all personnel are clear of the implement. Lower implement to the ground, place tractor in park, turn off engine, and remove key.*
- ***USE BAR STANDS TO SUPPORT THE IMPLEMENT.*** *Park implement on a clean, dry, and level surface. An uneven surface could cause implement to shift or fall, resulting in injury or death, as well as implement damage. Securely support all implement components that must be raised. Remove buildup of grease, oil, or debris prior to adjusting trash opener assembly depth.*

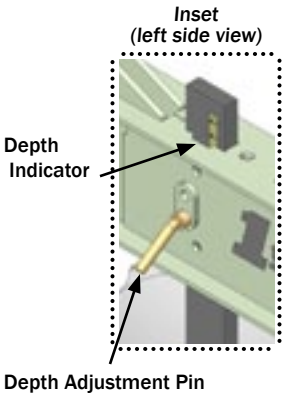

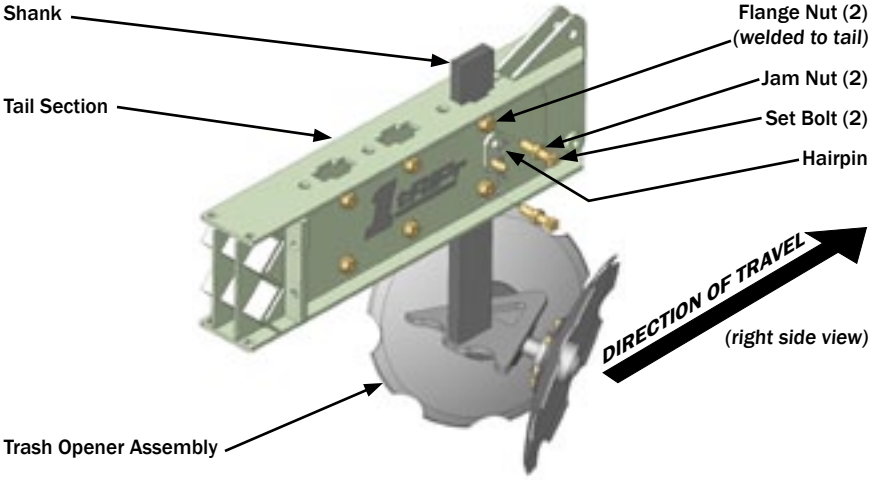

NOTE: *Recommended trash opener depth is approximately 1/2 inch below soil surface to gently remove surface residue with minimal soil disturbance. Trash openers are often removed when operating in a low residue cover crop such as drilled wheat, alfalfa, beans, etc.*

NOTE: *Recommended tools: Jam Nut - 15/16 end wrench, Set Bolt - 5/8 eight point socket. (3/4 end wrench will substitute for the 5/8 eight point socket, although not recommended)*

CAUTION

Be extremely careful working around unshielded sharp edges. Injury may result from contact with sharp edges.

153 - 045

1. Slightly loosen jam nuts and set bolts.
2. Remove hairpin from depth adjustment pin.
3. Physically support weight of trash opener assembly.
4. Remove depth adjustment pin from tail section and shank.
5. Vertically adjust trash opener assembly to desired depth.

NOTE: *A depth indicator allows for uniform trash opener assembly depth between row units. Depth indicator decal does not reflect actual tillage depth. Use depth indicator decal as a tool to achieve uniform depth across the implement.*

NOTE: *For finite vertical adjustment, store depth adjustment pin and utilize set bolts and jam nuts to achieve desired trash opener assembly depth.*

5. Insert depth adjustment pin through tail section and shank. Replace hairpin in depth adjustment pin.
6. Tighten set bolts and jam nuts to secure trash opener assembly to tail section.
7. Tighten hardware to proper torque specifications. *(pg. 7 - 4)*

TILLAGE SHANK ASSEMBLY DEPTH

(MOLE SHANK OR MOLE KNIFE)

The mole shank assembly or mole knife assembly shatters the root zone compacted layer while placing fertilizer at two precision depths, if desired. Once compacted layer depth and thickness is researched and established, tillage shank assembly depth is adjusted accordingly.

The illustration below is an example. Varying compacted layer depth and thickness either within or between fields, will warrant tillage shank depth adjustment. The tillage shank point of either tillage shank assembly should operate in close proximity to the lowest point of the compacted layer. Operating the tillage shank point below the compacted layer will heave and lift the compacted layer. It is recommended to operate the tillage shank point near, but not past the lowest point of the compacted layer for optimum performance.

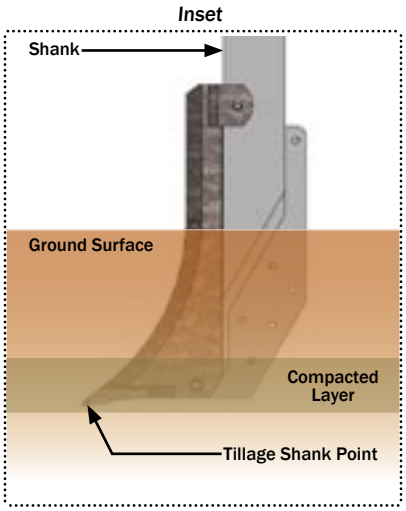

(RECOMMENDED TILLAGE DEPTH)

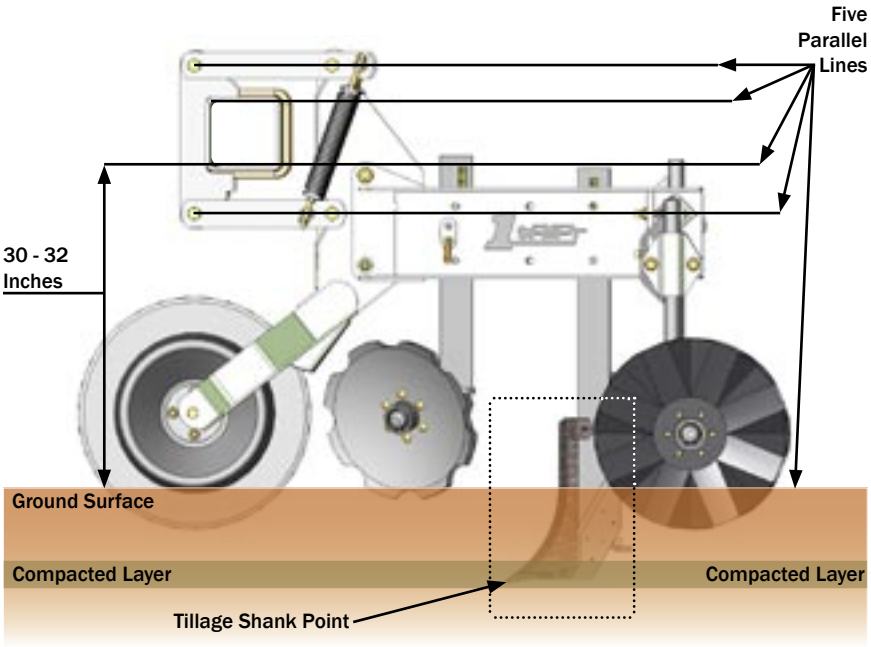

(MOLE SHANK ASSEMBLY PICTURED)

NOTE: *It is important to make sure that the toolbar height and orientation as well as the parallel linkages generally operate as illustrated above prior to adjusting tillage shank depth.*

Compacted layers vary within and between fields. Tillage shank depth will need to be adjusted accordingly. It is important to research compacted layer depth and thickness in order to accurately shatter root zone compacted layers across all tilled acres.

TILLAGE SHANK ASSEMBLY DEPTH

(MOLE SHANK OR MOLE KNIFE)

- ***AVOID CRUSHING.*** *Make sure all personnel are clear of the implement. Lower implement to the ground, place tractor in park, turn off engine, and remove key.*
- ***USE BAR STANDS TO SUPPORT THE IMPLEMENT.*** *Park implement on a clean, dry, and level surface. An uneven surface could cause implement to shift or fall, resulting in injury or death, as well as implement damage. Securely support all implement components that must be raised. Remove buildup of grease, oil, or debris prior to adjusting tillage shank assembly depth.*

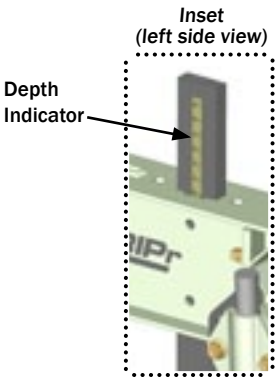

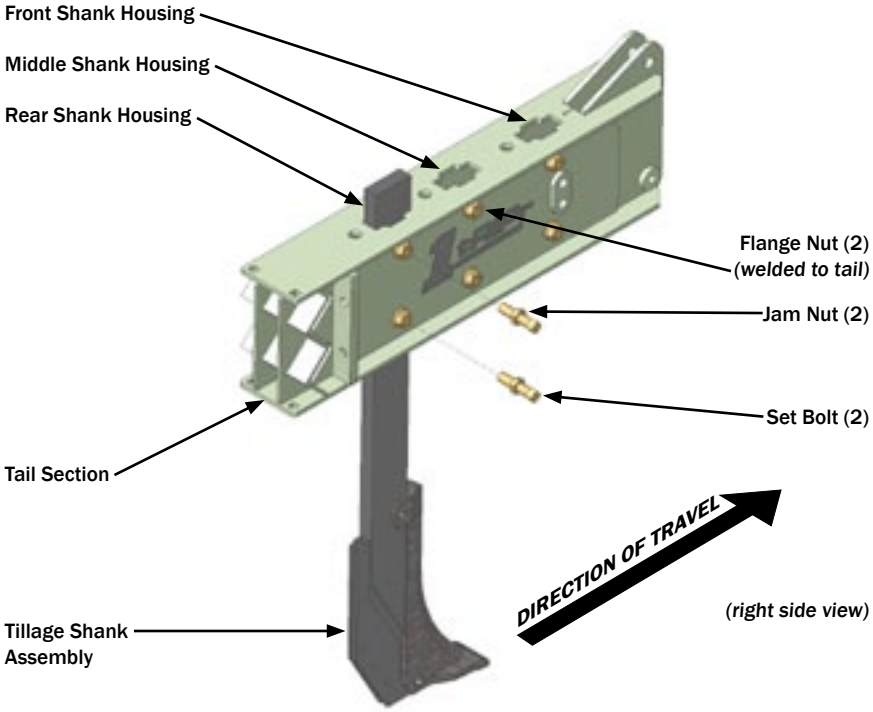

(MOLE SHANK ASSEMBLY PICTURED)

NOTE: *Recommended tools: Jam Nut - 15/16 end wrench, Set Bolt - 5/8 eight point socket. (3/4 end wrench will substitute for the 5/8 eight point socket, although not recommended)*

CAUTION

Be extremely careful working around unshielded sharp edges. Injury may result from contact with sharp edges.

153 - 045

1. Physically support the weight of the tillage shank assembly.
2. Slightly loosen jam nuts and set bolts.
3. Vertically adjust tillage shank assembly to desired depth.

   NOTE: *A depth indicator allows for uniform tillage shank assembly depth between row units. Depth indicator decal does not reflect actual tillage depth. Use depth indicator decal as a tool to achieve uniform depth across the implment.*

3. Tighten set bolts and jam nuts to secure tillage shank assembly to tail section.
4. Tighten hardware to proper torque specifications. *(pg. 7 - 4)*

   NOTE: *The tillage shank assembly can occupy either the front, middle, or rear shank housing locations.*

WAVY COULTER ASSEMBLY DEPTH AND WIDTH

Wavy coulter assemblies provide "lift and pinch" action to incorporate field residue, till, and firm the seedbed.

- ***AVOID CRUSHING.*** *Make sure all personnel are clear of the implement. Lower implement to the ground, place tractor in park, turn off engine, and remove key.*
- ***USE BAR STANDS TO SUPPORT THE IMPLEMENT.*** *Park implement on a clean, dry, and level surface. An uneven surface could cause implement to shift or fall, resulting in injury or death, as well as implement damage. Securely support all implement components that must be raised. Remove buildup of grease, oil, or debris prior to adjusting wavy coulter assemblies.*

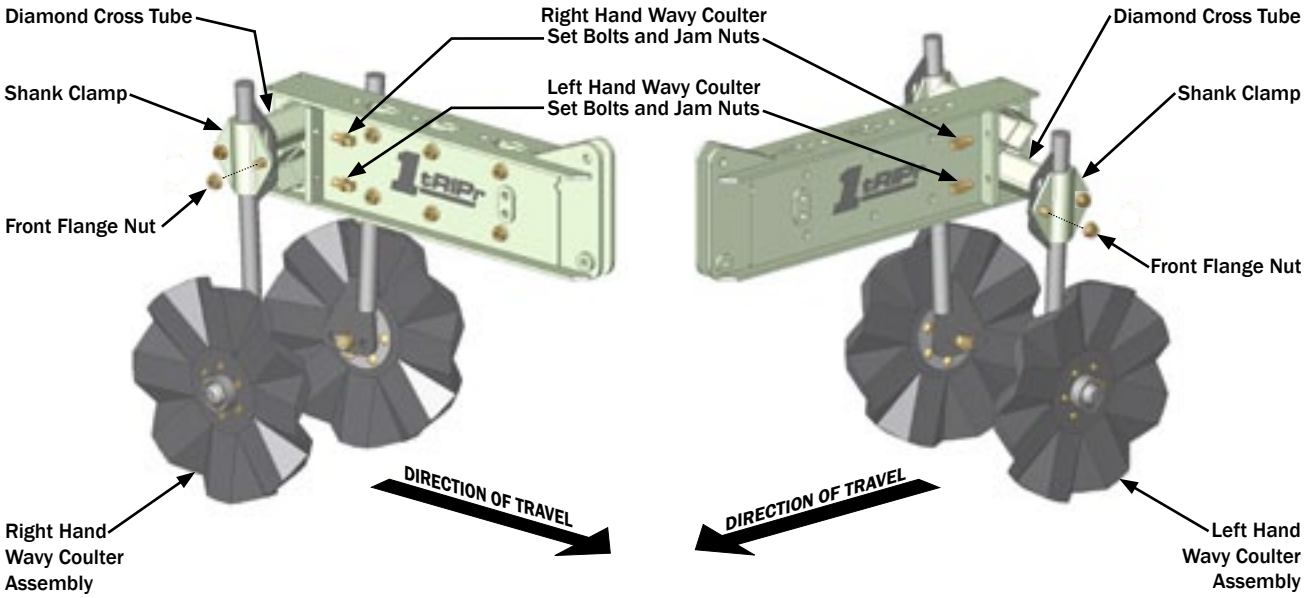

NOTE: *Recommended tools: Jam Nut and Front Flange Nut - 15/16 end wrench, Set Bolt - 5/8 eight point socket, (3/4 end wrench will substitute for the 5/8 eight point socket, although not recommended)*

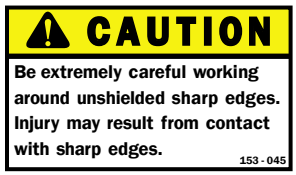

DEPTH ADJUSTMENT

1. Physically support the weight of the wavy coulter assembly.
2. Slightly loosen shank clamp front flange nut.
3. Vertically adjust wavy coulter assembly to desired depth.
4. Tighten front flange nut to torque specifications. *(pg 7 - 4)*

WIDTH ADJUSTMENT

1. Slightly loosen left hand and right hand jam nuts and set bolts.
2. Laterally adjust wavy coulter assemblies and diamond cross tubes to desired width.
3. Tighten left hand and right hand set bolts and jam nuts.
4. Tighten all hardware to proper torque specifications. *(pg. 7 - 4)*

WAVY COULTER ASSEMBLY FORE AND AFT

Each wavy coulter assembly can be adjusted fore and aft. The wavy coulter can be mounted to either the right or left side of the shank.

- ***AVOID CRUSHING.*** *Make sure all personnel are clear of the implement. Lower implement to the ground, place tractor in park, turn off engine, and remove key.*
- ***USE BAR STANDS TO SUPPORT THE IMPLEMENT.*** *Park implement on a clean, dry, and level surface. An uneven surface could cause implement to shift or fall, resulting in injury or death, as well as implement damage. Securely support all implement components that must be raised. Remove buildup of grease, oil, or debris prior to adjusting wavy coulter assemblies.*

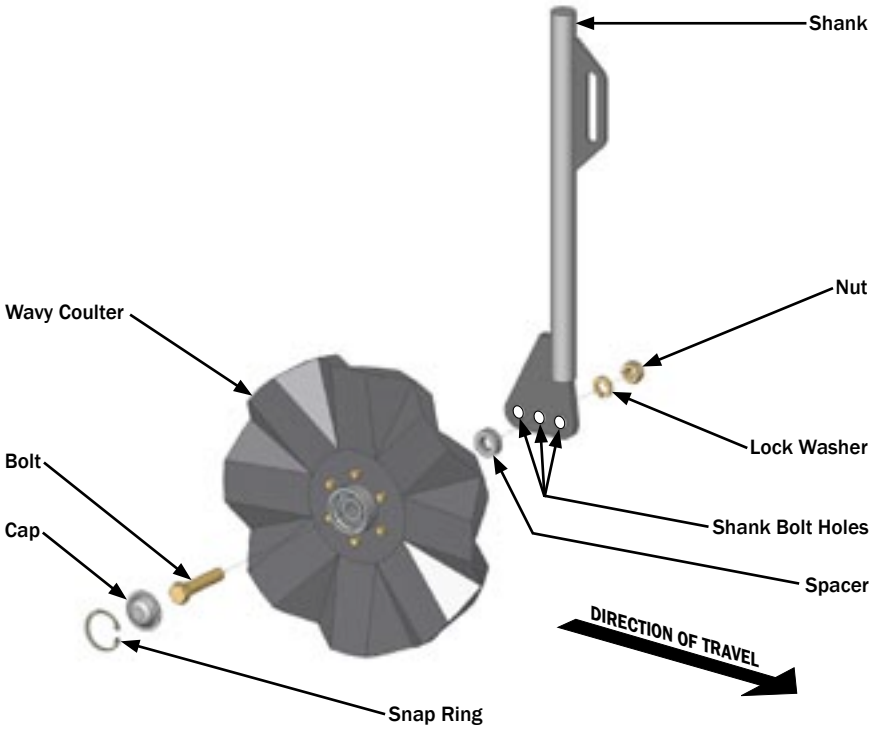

(RIGHT HAND WAVY COULTER PICTURED)

NOTE: *If utilizing a Combo Caddy and the* ***1tRIPr*** *row units are mounted to a double toolbar, the wavy coulters must occupy the forward most shank bolt holes.*

NOTE: *Recommended tools: Snap Ring Pliers, 1 1/8 sockets and/or end wrenches.*

FORE/AFT AND RIGHT OR LEFT SIDE OF SHANK ADJUSTMENT

CAUTION

Be extremely careful working around unshielded sharp edges. Injury may result from contact with sharp edges. 153 - 045

1. Remove snap ring and cap.
2. Secure bolt to remove nut and lock washer.
3. Reposition wavy coulter, bolt, and spacer to desired side of shank and bolt hole.
4. Secure bolt to install lock washer and nut.
5. Tighten all hardware to proper torque specifications. *(pg. 7 - 4)*
6. Install cap and snap ring.

ROLLING BASKET DOWN PRESSURE

An optional rolling basket assembly is available to complement the ***1tRIPr*** row unit. Rolling baskets reduce clod size to decrease soil variability, retain existing soil moisture, firm, and complete the optimum seedbed. Rolling baskets are mounted to the rear of the row unit tail section.

DANGER

- ***AVOID CRUSHING.*** *Make sure all personnel are clear of the implement. Lower implement to the ground, place tractor in park, turn off engine, and remove key.*
- ***USE BAR STANDS TO SUPPORT THE IMPLEMENT.*** *Park implement on a clean, dry, and level surface. An uneven surface could cause implement to shift or fall, resulting in injury or death, as well as implement damage. Securely support all implement components that must be raised. Remove buildup of grease, oil, or debris prior to adjusting rolling basket down pressure.*

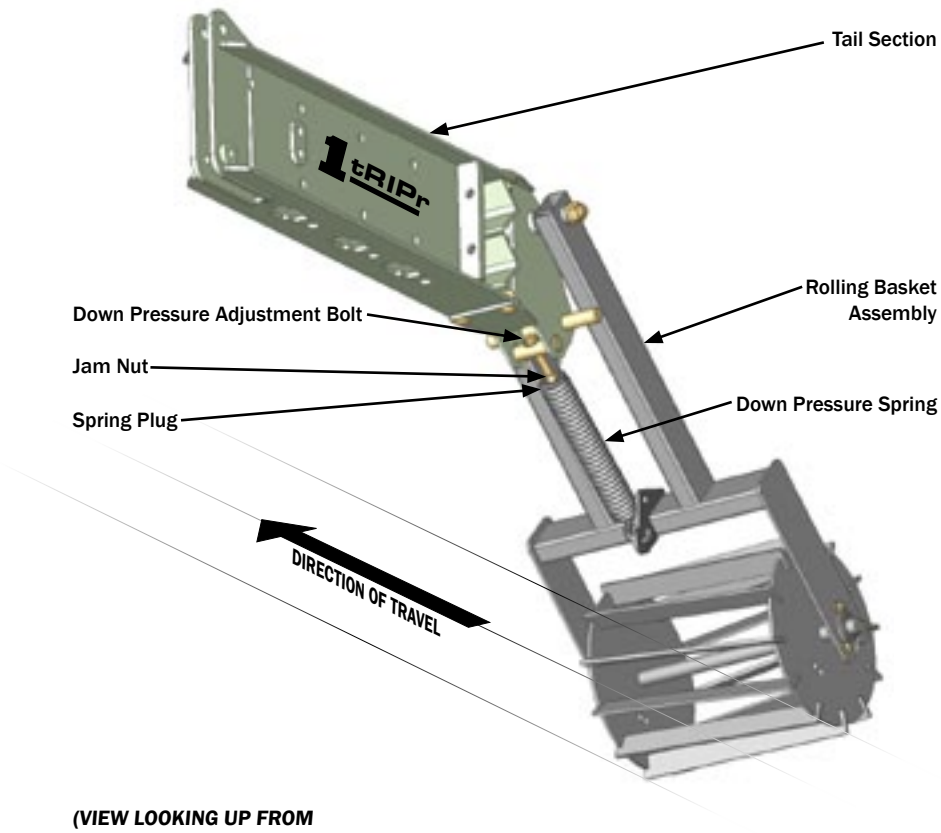

(VIEW LOOKING UP FROM UNDERNEATH THE ROW UNIT)

NOTE: *Recommended tools: Down Pressure Adjustment Bolt and Jam Nut - 3/4 end wrench, Spring Plug - 1 1/4 end wrench.*

CAUTION

Be extremely careful working around unshielded sharp edges. Injury may result from contact with sharp edges.

153 - 045

1. Loosen jam nut from spring plug.
2. Adjust down pressure adjustment bolt.
   (clockwise - increase pressure, counterclockwise - decrease pressure)
3. Tighten jam nut against spring plug to torque specifications. *(pg. 7 - 4)*

TROUBLESHOOTING

TROUBLESHOOTING

- ***AVOID CRUSHING.*** *Make sure all personnel are clear of the implement. Lower implement to the ground, place tractor in park, turn off engine, and remove key.*
- ***USE BAR STANDS TO SUPPORT THE IMPLEMENT.*** *Park implement on a clean, dry, and level surface. An uneven surface could cause implement to shift or fall, resulting in injury or death, as well as implement damage. Securely support all implement components that must be raised. Remove buildup of grease, oil, or debris prior to working on implement.*

CAUTION

Be extremely careful working around unshielded sharp edges. Injury may result from contact with sharp edges.

153 - 045

PROBLEM: ***Row unit tooling does not penetrate soil. Wing row units float upward.***

SOLUTION OPTIONS:

1. Make sure when in the field position, correct toolbar height and orientation is achieved. Use tractor lower hitch stop, lift assist wheels, and/or toolbar gauge wheels, if equipped, to set field position toolbar height and orientation. *(pg. 5 - 1)*

2. Adjust row unit down pressure springs to arrive at a setting where parallel linkages operate independent of the toolbar and the toolbar serves as a towing device. *(pg. 5 - 3)*

   NOTE: *Too much down pressure applied to the individual row units can essentially lift the toolbar to an undesireable operating height. Lifting the toolbar will cause the parallel linkages to "bottom out" and the row units will not operate independent of the toolbar resulting in non-uniform tillage across the implement.*

3. Raise wavy coulter assemblies. Wavy coulters can act as a "footprint" and prevent soil penetration. *(pg. 5 - 7)*

4. If a rigid toolbar is used with the ***1tRIPr*** row units, down pressure adjustment between row units typically varies slightly. If a folding or stacking toolbar is used, wing sections tend to float upward, unless mechanically restrained. *(refer to toolbar operator's manual)* Wing row units, not mechanically restrained, may require a decreased amount of down pressure to allow row units for perform consistently across the implement. *(pg. 5 - 3)*

TROUBLESHOOTING

- ***AVOID CRUSHING.*** *Make sure all personnel are clear of the implement. Lower implement to the ground, place tractor in park, turn off engine, and remove key.*
- ***USE BAR STANDS TO SUPPORT THE IMPLEMENT.*** *Park implement on a clean, dry, and level surface. An uneven surface could cause implement to shift or fall, resulting in injury or death, as well as implement damage. Securely support all implement components that must be raised. Remove buildup of grease, oil, or debris prior to working on implement.*

PROBLEM: ***Row unit plugs with field residue between the depth band coulter assembly and trash opener assembly.***

SOLUTION OPTIONS:

CAUTION

Be extremely careful working around unshielded sharp edges. Injury may result from contact with sharp edges. 153 - 045

1. Install trash opener assembly in middle shank housing to increase distance between the depth band coulter and trash opener assembly. *(pg. 4 - 4, 5 - 4)*

   NOTE: *Increasing distance between row unit tooling usually increases the ability of field residue to pass through the row unit without plugging.*

   NOTE: *When utilizing trash opener assembly in the middle shank housing, store depth adjustment pins and utilize set bolts and jam nuts to achieve desired trash opener assembly depth.*

2. Proper toolbar height and orientation setting should ensure maximum depth band coulter cutting depth. Make sure the coulter is penetrating soil in order that the depth band governs soil penetration. *(pg. 5 - 1)*

3. Wet or damp field conditions can adversely effect the performance of the ***1tRIPr*** row unit. Typically, wet or damp field conditions do not allow residue to pass through the row unit as effectively as drier conditions.

4. Alter ground speed to change rate at which field residue passes through row unit tooling. Slower ground speeds generally reduce plugging by allowing residue to smoothly pass through row unit tooling.

5. Slightly raise trash opener assembly to reduce residue in contact with the trash opener assembly. *(pg. 5 - 4)*

6. Remove and store trash opener assembly. *(pg. 5 - 4)*

TROUBLESHOOTING

- ***AVOID CRUSHING.*** *Make sure all personnel are clear of the implement. Lower implement to the ground, place tractor in park, turn off engine, and remove key.*
- ***USE BAR STANDS TO SUPPORT THE IMPLEMENT.*** *Park implement on a clean, dry, and level surface. An uneven surface could cause implement to shift or fall, resulting in injury or death, as well as implement damage. Securely support all implement components that must be raised. Remove buildup of grease, oil, or debris prior to working on implement.*

CAUTION

Be extremely careful working around unshielded sharp edges. Injury may result from contact with sharp edges.

153 - 045

PROBLEM: ***Row unit plugs with field residue between the trash opener assembly and tillage shank.***

SOLUTION OPTIONS:

1. Slightly lower trash opener assembly to reduce the amount of field residue in front of the tillage shank. *(pg. 5 - 4)*
2. Proper toolbar height and orientation setting should ensure maximum depth band coulter cutting depth. Make sure the coulter is penetrating soil in order that the depth band governs soil penetration. *(pg. 5 - 1)*
3. Install trash opener assembly in front shank housing. Install tillage shank in rear shank housing. This setting will allow maximum distance between the trash opener and tillage shank. *(pg. 4 - 4, 5 - 4)*

   NOTE: *Increasing distance between row unit tooling usually increases the ability of field residue to pass through the row unit without plugging.*

4. Alter ground speed to change rate at which field residue passes through row unit tooling. Slower ground speeds generally reduce plugging by allowing residue to smoothly pass through row unit tooling.
5. Wet or damp field conditions can adversely effect the performance of the ***1tRIPr*** row unit. Typically, wet or damp field conditions do not allow residue to pass through the row unit as effectively as drier conditions.

TROUBLESHOOTING

- ***AVOID CRUSHING.*** *Make sure all personnel are clear of the implement. Lower implement to the ground, place tractor in park, turn off engine, and remove key.*
- ***USE BAR STANDS TO SUPPORT THE IMPLEMENT.*** *Park implement on a clean, dry, and level surface. An uneven surface could cause implement to shift or fall, resulting in injury or death, as well as implement damage. Securely support all implement components that must be raised. Remove buildup of grease, oil, or debris prior to working on implement.*

PROBLEM: ***Row unit plugs with field residue between the tillage shank and wavy coulters.***

SOLUTION OPTIONS:

CAUTION

Be extremely careful working around unshielded sharp edges. Injury may result from contact with sharp edges.

153 - 045

1. Slightly increase wavy coulter tillage width. Increasing tillage width should allow residue to pass between the wavy coulters. *(pg. 5 - 7)*

   NOTE: *It is not recommended for wavy coulter tillage width to exceed the width at which trash openers remove residue. If wavy coulter tillage zone exceeds the residue free strip, wavy coulters are more likely to plug as well as not penetrate soil.*

2. Increase distance between tillage shank assembly and wavy coulter assemblies by adjusting wavy coulter assemblies fore/aft. *(pg. 5 - 8)*

   NOTE: *Increasing distance relationship between row unit tooling usually increases the ability of field residue to pass through the row unit without plugging.*

3. Alter ground speed to change rate at which field residue passes through row unit tooling. Slower ground speeds generally reduce plugging by allowing residue to smoothly pass through row unit tooling.

4. Wet or damp field conditions can adversely effect the performance of the ***1tRIPr*** row unit. Typically, wet or damp field conditions do not allow residue to pass through the row unit as effectively as drier conditions.

5. Install tillage shank assembly in middle or front shank housing to increase distance between tillage shank and wavy coulter assemblies. *(pg 4 - 4)*

TROUBLESHOOTING

- ***AVOID CRUSHING.*** *Make sure all personnel are clear of the implement. Lower implement to the ground, place tractor in park, turn off engine, and remove key.*
- ***USE BAR STANDS TO SUPPORT THE IMPLEMENT.*** *Park implement on a clean, dry, and level surface. An uneven surface could cause implement to shift or fall, resulting in injury or death, as well as implement damage. Securely support all implement components that must be raised. Remove buildup of grease, oil, or debris prior to working on implement.*

CAUTION

Be extremely careful working around unshielded sharp edges. Injury may result from contact with sharp edges.

153 - 045

PROBLEM: ***Field residue plugs between row units.***

SOLUTION OPTIONS:

1. Slightly raise trash opener assembly to reduce the amount of field residue passing between row units. *(pg. 5 - 4)*
2. Alter ground speed to change rate at which field residue passes through row unit tooling. Slower ground speeds generally reduce plugging by allowing residue to smoothly pass through row unit tooling.
3. Decrease wavy coulter tillage width. Decreasing tillage width should allow more clearance between row units. *(pg. 5 - 7, 5 - 8)*
4. Increase distance between tillage shank assembly and wavy coulter assemblies by adjusting wavy coulter assemblies fore and aft. *(pg. 5 - 8)*

   NOTE: *Increasing distance relationship between row unit tooling usually increases the ability of field residue to pass through the row unit without plugging.*
5. Wet or damp field conditions can adversely effect the performance of the ***1tRIPr*** row unit. Typically, wet or damp field conditions do not allow residue to pass through the row unit as effectively as drier conditions.
6. Stagger tooling between row units. (i.e. trash opener assembly and tillage shank assembly utilizing the front and middle shank housings and adjacent row unit utilizing the middle and rear shank housings and so on across the implement) The staggering of the row unit tooling accross the implement should assist with residue flow between row units. *(pg. 4 - 4)*

MAINTENANCE

PRACTICE SAFE MAINTENANCE

- Proper maintenance is your responsibility. Maintenance neglect and/or poor maintenance practices can result in injury or death. Always use the proper tools to maintain implement.

- ***AVOID CRUSHING.*** Make sure all personnel are clear of the implement. Lower implement to the ground, place tractor in park, turn off engine and remove key.

- ***USE BAR STANDS TO SUPPORT THE IMPLEMENT.*** Park implement on a clean, dry, and level surface. An uneven surface could cause implement to shift or fall, resulting in injury or death, as well as implement damage. Securely support all implement components that must be raised. Remove buildup of grease, oil, or debris prior to maintaining implement.

- ***AVOID ENTANGLEMENT.*** Never lubricate or service implement in motion. Keep away from power driven parts when in motion. Disengage power sources prior to maintaining implement. Injury or death can result from contact with power driven parts when in motion.

- ***AVOID CRUSHING.*** Do not stand between the tractor and implement when connecting or disconnecting implement. Injury or death can result from being trapped between the tractor and implement.

- Escaping pressurized hydraulic fluid can pentrate skin, resulting in injury or death. Relieve hydraulic system pressure before connecting or disconnecting tractor. Use cardboard or wood, ***NOT BODY PARTS***, to check for suspected hydraulic leaks. Wear protective gloves and safety glasses or goggles when working with hydraulic systems. If an accident occurs, see a doctor immediately for proper treatment.

PRACTICE SAFE MAINTENANCE

- Never operate a combustion engine in an enclosed area. Make sure there is adequate ventilation. Exhaust fumes can cause asphyxiation.

- Be extremely careful working around unshielded sharp edges. Injury may result from contact with sharp edges.
- Keep all parts in good condition and properly installed. Replace damaged or missing parts immediately.
- Remove tools and unused parts from implement prior to operation.

LUBRICATION

- Grease - use high quality multi-purpose grease.
  Follow recommended 10 hour service interval illustrated below.

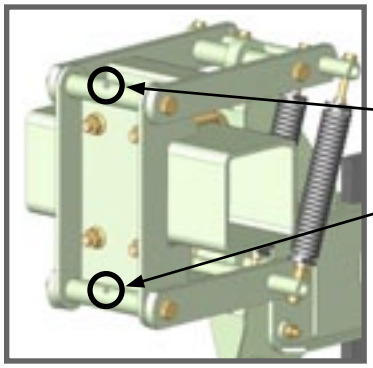

Front Parallel Linkage Bushings

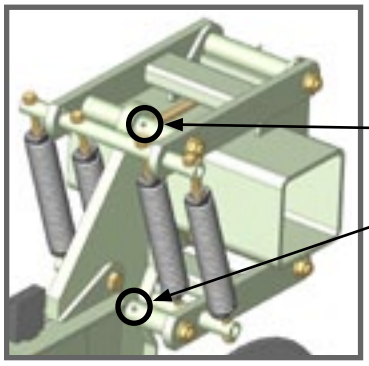

Rear Parallel Linkage Bushings

LUBRICATION

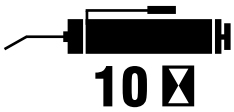

- Grease - use high quality multi-purpose grease.
  Follow recommended 10 hour service interval illustrated below.

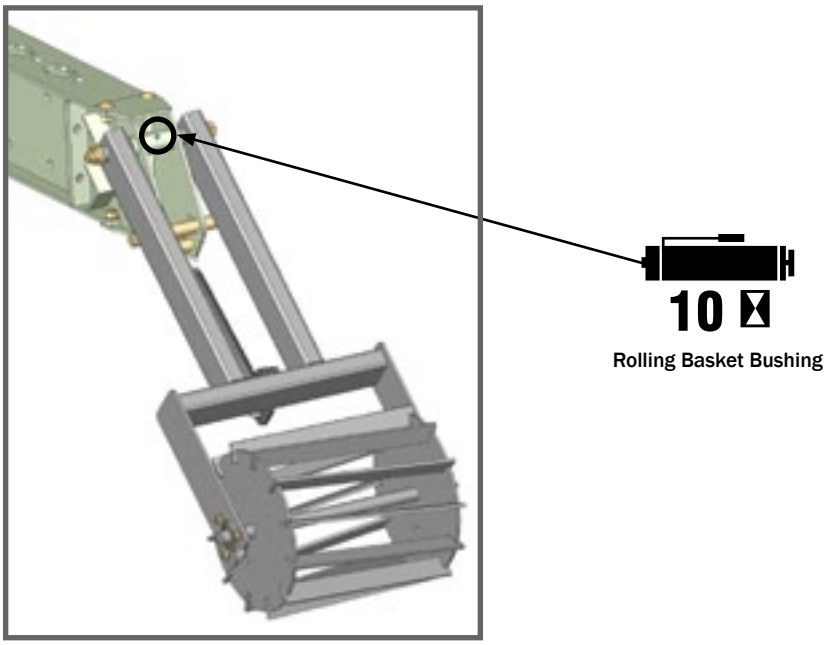

IMPLEMENT INSPECTION

- When replacement parts are necessary for periodic maintenance and servicing, genuine factory replacement parts must be used to restore implement to original specifications. Replace broken or worn parts immediately. Contact your Orthman dealer for replacement parts.

- During break-in (40 hours), check hardware for proper torque every 10 to 20 hours. *(pg. 7 - 4)*

- Before each use, check hardware for wear and proper torque. *(pg. 7 - 4)*
  Replace damaged or missing hardware with hardware of an identical grade to restore implement to original specifications.

- Do not allow debris to buildup on any surface of the implement.

- Replace all shields and guards. Be sure all tools, parts, and service equipment are removed prior to transporting equipment.

TORQUE SPECIFICATIONS

RECOMMENDED DRY BOLT TORQUE

SAE GRADE 5

Bolt Size	ft. - lb.
3/8	32
7/16	52
1/2	80
9/16	115
5/8	160
3/4	280
7/8	455
1	680
1 1/8	850
1 1/4	1200

SAE GRADE 8

Bolt Size	ft. - lb.
3/8	36
7/16	59
1/2	88
9/16	130
5/8	175
3/4	315
7/8	510
1	760
1 1/8	1075
1 1/4	1500

IMPLEMENT STORAGE

- Clean and touch up paint seasonally to avoid corrosion and rust. Contact your Orthman dealer for touch up paint.
- Inspect all decals and replace if missing or damaged. Contact your Orthman dealer for replacement decals. *(pg. 2 - 8, 2 - 9)*
- Grease all zerks regardless of hourly interval prior to storage. *(pg. 7 - 2)*

- Check all hardware according to torque specifications prior to storage. *(pg. 7 - 4)*
- Replace worn or damaged parts prior to storage.
- Store inside if possible. Storing implement inside will prolong the life of ***1tRIPr*** components.

- ***AVOID CRUSHING.*** Make sure all personnel are clear of the implement. Lower implement to the ground, place tractor in park, turn off engine, and remove key.
- Storing implement on the ground will relieve the tractor three point hitch of hydraulic pressure. Hydraulic systems tend to settle, endangering anything underneath the implement.

- ***USE BAR STANDS TO SUPPORT THE IMPLEMENT.*** Store implement on a clean, dry, and level surface. An uneven surface could cause implement to shift or fall, resulting in injury or death, as well as implement damage. Securely support all implement components that must be raised. Store implement away from human activity.

NOTES